Reference Guide for the DS7400Xi (Ver. 4+) Control/Communicator

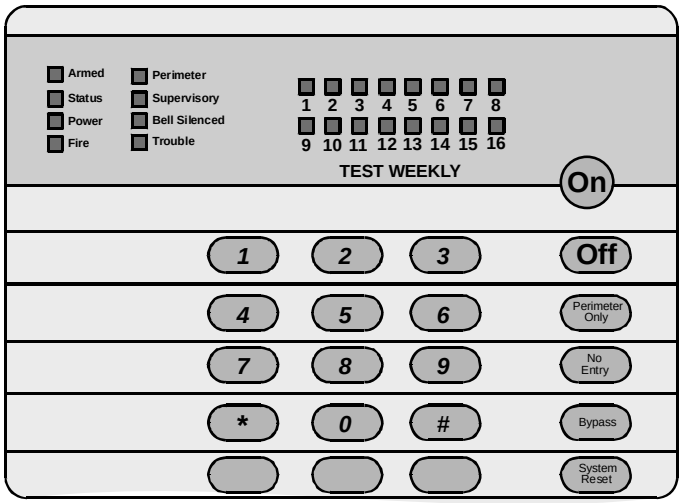

DS7445/DS7445i

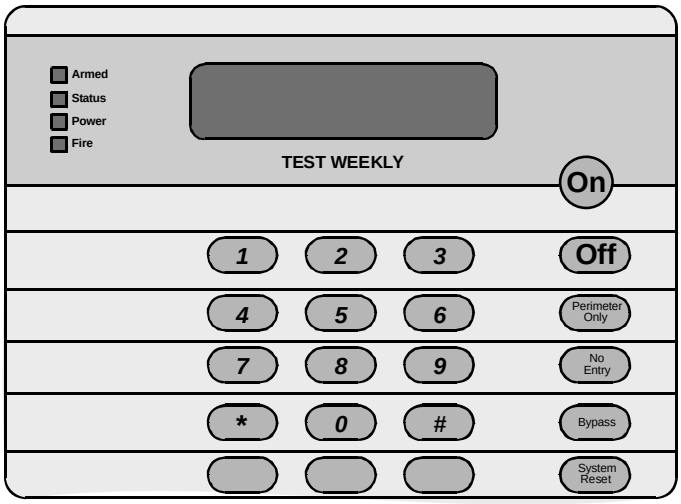

DS7447/DS7447E

Keypad Quick Reference Guide

Turning On (arming) your System using the DS7445/DS7445i or DS7447/DS7447E Keypad

Normal Arming	[PIN] + [On]
Perimeter Arming, no entry delay	[PIN] + [No Entry] + [Perimeter Only]
Perimeter Arming, with entry delay	[PIN] + [Perimeter Only]
Maximum Security Arming	[PIN] + [No Entry] + [On]
Custom Arming	[PIN] + [#] [4]
Set Delayed Arming	[PIN] + [#] [9] [9] and enter number of hours from current time to the desired arming time.
Extend Automatic Arming	[PIN] + [OFF] during pre-arm time
Force Arming	Enter an arming command followed by [Bypass]
Zone Bypass	[PIN] + [Bypass] followed by the Zone number. [PIN] +[Bypass] [*] to clear ALL Bypasses.

Commands for other System Features

Chime Mode	[PIN] + [#] [7]
System Walk Test	[PIN] + [#] [8] [1]
Read Event History	[PIN] + [#] [8] [9]
Battery Test	[PIN] + [System Reset]
Communicator Test	[PIN] + [#] [8] [2]
Fire Reset	[PIN] + [System Reset]
Remote Program Dial-out	[PIN] + [#][8] [3]
Remote Program Answer	[PIN] + [#] [8] [6]
Battery/Sounder Test	[PIN] + [#] [8] [5]
Error Display	[PIN] + [#] [8] [7]
Error Display Reset	[PIN] + [System Reset]
Fire Walk Test	[PIN] + [#] [9] [1]
To Silence a Fire Trouble/Alarm	[PIN] + [Off]
To Clear a Fire Trouble Display	[PIN] + [System Reset]

Access Control

Enter your [Access Control PIN] followed by [Off]

Turning Off (disarming) your System

Enter your [PIN] followed by [Off]

NOTE: For additional information on operating this system, consult the DS7400Xi (Ver. 4+) User's Guide (P/N: 43851) and section 7 of this Reference Guide.

BOSCH

Table of Contents

1.0 Specifications

1.1 Enclosure Housing

The standard enclosure is manufactured from 20 Guage (1.0 mm), cold-rolled steel, and measures 12.5 by 14.5 by 3 inch (31.8 by 36.8 by 7.6 cm) (HxWxD). A keyed lock is included, and this enclosure has provision for an optional tamper switch (required for commercial burglary applications) for monitoring the door.

1.2 Storage and Operating Temperature

- Temperature: +32°F to +120°F (0°C to +49°C)

1.3 Power

NOTE: The total current output capacity for all auxiliary devices, including keypads and smoke detectors = 1.5 A standby, 2.5 A alarm. The following ratings are maximum values. The total combined output cannot exceed the maximum load current.

- Input power: 18 VAC, 50 VA, 50 Hz./60 Hz.
- Auxiliary power: 12 VDC, 1.0 A max.
- UL Listed Alarm Power Output: 12 VDC, 1.75 A max.
- Auxiliary power voltage range: 12 V special application
- Optional Standby battery (P334): 12 V, 7.0 Ah - 35 Ah max.
- Control panel current draw: 175 mA, Standby
  250 mA, Alarm

1.4 Outputs

- Alarm Output: 12 VDC, 1.75 A output. Can be programmed for steady or pulsed output.
- Programmable Output 1*: Solid state current sink (1.0 A max.). Shorts to Aux. negative when activated. Connect device to Aux. power positive. Can be used for alarm, arming state, or access control.** This output is generally programmable.
- Programmable Output 2*: Solid state voltage source (500 mA max.). Can be used for alarm, arming state, or access control.** This output is generally programmable. For use with such compatible devices as the Listed DS250 with a 4-wire base.

* = Current draw should be subtracted from either maximum auxiliary or maximum alarm current draw.
** = Not investigated to the requirements of UL294.

1.5 Zones

- 8 on-board zones. Up to 248 total zones with expansion modules.
- Zone Response Time: 300 ms.

1.6 Keypads

- Maximum # of keypads: 15 Keypads
- Maximum wire length each: 1000 feet (305 m)
- Maximum wire length total: 6000 feet (1830 m) in system
- Wire type: 4 conductor, unshielded, #22 AWG (0.8 mm) "Telephone quad" or #18 AWG (1.0 mm) quad wiring can be home-run or daisy- chained.

NOTE: No more than 2 keypads (#22 AWG) or 3 keypads (#18 AWG) are recommended on any 1000 foot (305 m) run.

NOTE: Shared cable is not recommended for keypad, multiplex, options bus, telephone, or siren wiring.

NOTE: Fire Systems installed under NFPA-72 or UL Listed Fire Systems require the use of 18 AWG or larger wire.

1.7 Communicator

Will report to two phone numbers with full single, double and back-up reporting. Communicates in SIA (110 or 300 baud), 3/1, 3/1 Ext., 3/1 with Parity, 3/1 Ext. with Parity, 4/1, 4/2, BFSK, Contact ID, and Pager formats.
FCC Registration Number is ESVUSA-75333-AL-E
The ringer equivalence is 0.1B
Commercial Fire CSFM Listing Number is 7165-1062:113
Residential Fire CSFM Listing Number is 7167-1062:114

1.8 Partitions

The system has the capacity for 8 independent partitions. One partition may be a common area.

1.9 Users

The DS7400Xi Ver 4+ system allows up to 200 individual users. Each user will have his own PIN number (the 4- or 6-digit code entered at the keypads) and his own authority level (to determine which functions he may perform).

1.10 Lightning Protection

MOVs and spark gaps provide protection from lightning surges and static discharges.

1.11 Burglar/Fire Zone Inputs

- Number of circuits: 8 Circuits on-board
- End-of-line resistor: 2.2 kΩ (P/N 25899, provided)
- Loop resistance tolerance: 60 ohms

1.12 Fire Signal Initiating Circuit (2-wire mode)

Fire circuit will work with 2- or 4-wire detectors and has optional alarm verification.

- Number of circuits: 8 Circuits on-board
- Type of circuit: Class B, latching
- End-of-line resistor: 2.2 kΩ (P/N 25899, provided)
- Supervisory current: 5.5 mA
- Maximum short circuit current: 22 mA
- Maximum line resistance: 60 ohms
- Circuit voltage range: 8.5 to 14.1 VDC
- Total detector standby current: 2.5 mA

1.13 Multiplex Bus Wiring Requirements

NOTE: Do **not** use twisted-pair or shielded cable. Do **not** share cable with the keypad lines.

- #22 AWG (0.8 mm). Up to 2000 feet (610 m) per system.
- #18 AWG (1.0 mm). Up to 5000 feet (1525 m) per system.

1.13.1 Multiplex Zone Loop Wiring

- Maximum wire length not to exceed 500 feet (150m) regardless of the wire gauge.

1.14 Option Bus Wiring Requirements

- Maximum wire length 1000 feet (305 m) per home-run.

1.15 Max. Load Currents

Max. Load Currents	Standby	Alarm
UL Installations	1.5 A	2.5 A
Maximum Current By Output: Not to exceed the maximum load currents listed above in Standby or Alarm		
Aux. Power & Keypad (Combined)	1.0 A	1.0 A
Option Power	1.0 A	1.0 A
Bell Output	X	1.75 A
Programmable Output 2	500 mA	500 mA
Loop Power +	500 mA	500 mA

1.16 Backup Battery Calculation

- The following table is used to calculate the standby battery capacity required by NFPA when using the DS7400Xi:

Device	Quantity	Standby Current per Device	Total Standby Current (Quantity x Standby Current per Device)	Alarm Current per Device	Total Alarm Current (Quantity x Alarm Current per Device)
DS7400Xi (4+) Control Panel	1	175 mA	175 mA	250 mA	250 mA
DS7416i Advanced Radio Communications Module		127 mA		127 mA	
DS7412 - RS232 Serial Interface Module		35 mA max.		35 mA max.	
DS7420i -Dual Phone Line/Bell Supervision Module		20 mA		140 mA	
DS7430 – Multiplex Expansion Module		65 mA		65 mA	
DS7432 – 8-Input Remote Module		10 mA		10 mA	
DS7433 – 8-Input Direct Module		65 mA		80 mA*	
DS7436 – Dual Multiplex Expansion Module		130 mA		130 mA	
DS7445/DS7445i Keypad		75 mA		75 mA	
DS7447/ DS7447E Keypad		100 mA		100 mA	
DS7448 Keypad		80 mA		100 mA	
DS7450, DS7452, DS7455 Contact Points		350 µA		350 µA	
DS7457 – Single Zone Multiplex Input Module		350 µA		350 µA	
DS7460 – Dual Zone Module		1 mA		1 mA	
DS7465 – Input/Output Module		1 mA		1 mA	
DS7480 – Bell Supervision Module		7 mA		50 mA	
DS7481 – Single Phone Line Monitor		20 mA		20 mA	
DS7488 – Octal Relay Module**		10 mA + 40 mA**		10 mA + 40 mA**	
DS7489 – Solid State Output Module		10 mA		750 mA max.***	
MX280 Series Multiplex Smoke Detectors		500 µA		560 µA	
MX540 (DS7473) PIR Detector		800 µA		800 µA	
MX835 TriTech® PIR/Microwave Detector		6 mA		35 mA	
MX775 (DS7470) PIR Detector		200 µA		200 µA	
MX794 (DS7474) PIR Detector		800 µA		800 µA	
MX934 (DS7471) PIR Detector		200 µA		200 µA	
MX938 (DS7472) PIR Detector		200 µA		200 µA	
MX950 (DS7476) TriTech® PIR/Microwave Detector		6 mA		35 mA	
RF3222 Wireless Receivers		30 mA		30 mA	
2-Wire Smoke Detectors					
4-Wire Smoke Detectors					
Bells, Horns, etc.					
Other Sensors					
Other					
		Grand Total		Grand Total	

* = Add 15 mA for each additional zone in alarm.
** = When calculating Standby and Alarm Current for the Octal Relay Module, use 10 mA plus 40 mA for each activated relay.
*** = Maximum current draw if using the DS7400Xi Panel power supply. Total of all outputs **cannot** exceed 750 mA.

1.17 Standby Current Load

- Battery Ah - (20% Storage + 0.375 Ah Alarm)
- The following table is the derated battery divided by hours minus the control standby (175 mA):

Rechargeable Battery Size	Max. Standby for 4 hours	Max. Standby for 8 hours	Max. Standby for 24 hours	Max. Standby for 48 hours	Max. Standby for 60 hours	Max. Standby for 72 hours	Max. Standby for 80 hours
7 Ah	1.0 A	470 mA	X	X	X	X	X
8 Ah	1.2 A	580 mA	X	X	X	X	X
14 Ah	1.5 A	1.1 A	270 mA	X	X	X	X
15 Ah	1.5 A	1.2 A	300 mA	X	X	X	X
17.2 Ah	1.5 A	1.5 A	380 mA	100 mA	X	X	X
21 Ah	1.5 A	1.5 A	500 mA	160 mA	100 mA	X	X
28 Ah	1.5 A	1.5 A	740 mA	280 mA	190 mA	130 mA	100 mA
30 Ah	1.5 A	1.5 A	800 mA	310 mA	210 mA	150 mA	120 mA
35 Ah	1.5 A	1.5 A	970 mA	400 mA	280 mA	200 mA	170 mA

1.18 Options

- **DS7412:** RS232 Serial Interface module.
  The DS7412 module allows the panel to send event information, in an ASCII format, directly to a serial printer or computer. In addition, the interface allows the direct connection of a computer to the panel for programming via the WDSRP programming software.
  - Current Draw= 25 mA; 35 mA with LEDs on.

- **DS7416i:** Advanced Radio Communications Module provides a means of communicating alarm and supervision signals using the Motient radio network. This can be a replacement for, or a complement to, the standard digital communicator.
  - Current draw = 127 mA Standby and Alarm.

- **DS7420i:** Dual Phone Line/Bell Supervision Module (1 per system).
  The DS7420i allows the control to be used in NFPA 72 installations. It provides two supervised 12.0 VDC signaling outputs, one Class A (Style D) input zone, and dual phone line transmission and supervision.
  - Current Draw = 20 mA Standby; 140 mA Alarm.

- **DS7430:** Multiplex Expansion Module (1 per system).
  The DS7430 provides a two-wire multiplex bus for the connection of additional remote zones. It also supplies up to 200 mA for 4-wire multiplex devices such as the DS7432.
  - Current Draw = 65 mA, Standby; 65 mA, Alarm.

- **DS7432:** 8-Input Remote Module (up to 30 per system. Requires a DS7430 or DS7436 Multiplex Expansion Module).
  The DS7432 provides a means of monitoring conventional Normally Open or Normally Closed contacts. It reports their status to the control panel as multiplex addresses. It occupies eight multiplex zones on the system and can monitor up to eight separate loops. It will support 4-wire smoke detectors.
  - Current Draw = 10 mA; Standby. 10 mA, Alarm.

- **DS7433:** 8-Input Direct Module (1 per system. Can not be used with the DS7430 or DS7436 Multiplex Expansion Modules).
  The DS7433 provides a means of expanding the system to include eight additional hard-wired zones. Each zone can support up to twenty 2-wire smoke detectors (can also support 4-wire smoke detectors).
  - Current Draw = 65 mA, Standby; 80 mA, Alarm. Add 15 mA for each additional zone in alarm.

- **DS7436:** Multiplex Expansion Module. (1 per system.)
  The DS7436 provides two two-wire multiplex buses for the connection of up to 120 remote points. It also supplies 200 mA per bus.
  - Current Draw = 130 mA, Standby or Alarm.

- **DS7445/DS7445i:** Control Station. (15 Keypads max. per system). The DS7445/DS7445i is an LED keypad which has LEDs representing the first 8 zones of the system. It displays information on various control panel functions. A built in sounder is used as an interior warning device and to annunciate keystroke entries.
  - Current Draw = 75 mA, Standby; 75 mA, Alarm.

- **DS7447/DS7447E:** Control Station. (15 Keypads max. per system)
  The DS7447/DS7447E is an Alpha-Numeric LCD keypad. It displays information on various control panel functions. A built-in sounder is used as an interior warning device and to annunciate keystroke entries.
  - Current Draw = 100 mA, Standby; 100 mA, Alarm.
  - Keypad Access Output: The DS7447/DS7447E Alpha Keypad will provide a ten (10) second access relay output if equipped with the optional K800 Relay. The relay will energize at the keypad if the user has a master, unlimited, general, or access PIN. The output will change only if the user has access to the partition assigned to the keypad. See the *DS7445/DS7447 Keypad Installation Instructions (P/N: 22235)* or the *DS7445/DS7445i/DS7447E Installation Instructions (P/N: 4998138630)* for wiring information.

- **DS7448:** Control Station. (15 Keypads max. per system)
  The DS7448 is a four-wire LCD annunciator keypad. It has a Silence key and a Reset key used for controlling annunciator and control panel operation, a Keylock Switch that can be used to lock out the annunciator to prevent unwanted silencing or resetting of the control panel, and a two-line, 16-character Display capable of showing all messages normally displayed on a DS7447/ DS7447E keypad.
  - Current Draw = 80 mA, Standby; 100 mA, Alarm

- **DS7450:** Flush Mount Single Multiplex Contact Point (requires a DS7430 Multiplex Expansion Module).
  The DS7450 is intended as a replacement for conventional dry contacts, and to report an actual multiplex address to the control panel. Occupies 1 zone.
  - Current Draw = 350 µA, Standby; 350 µA, Alarm.

- **DS7452:** Surface Mount Single Multiplex Contact Point (requires a DS7430 Multiplex Expansion Module).
  The DS7452 is intended as a replacement for conventional dry contacts, and to report an actual multiplex address to the control panel. Occupies 1 zone.
  - Current Draw = 350 µA, Standby; 350 µA, Alarm.

- **DS7455:** Surface Mount Single Multiplex Contact Point (requires a DS7430 Multiplex Expansion Module).
  The DS7455 is intended as a replacement for conventional dry contacts, and to report an actual multiplex address to the control panel. Occupies 1 zone.
  - Current Draw = 350 µA, Standby; 350 µA, Alarm.

- **DS7457:** Single Zone Multiplex Input Module (requires a DS7430 Multiplex Expansion Module).
  The DS7457 provides a means of monitoring conventionally Normally Open or Normally Closed contacts. It reports their status to the control panel as multiplex addresses. It occupies one multiplex zone on the system and can monitor one loop. It also includes a tamper loop.
  - Current Draw = 350 µA, Standby; 350 µA, Alarm.

- **DS7460:** Dual Zone Module (up to 60 per system. Requires a DS7430 Multiplex Expansion Module).
  The DS7460 provides a means of monitoring conventional Normally Open or Normally Closed contacts. It reports their status to the control panel as multiplex addresses. It occupies two multiplex zones on the system and can monitor up to two separate loops.
  - Current Draw = 1 mA, Standby; 1 mA, Alarm.

- **DS7465:** Input/Output Module (up to 60 per system. Requires a DS7430 Multiplex Expansion Module).
  The DS7465 provides a Form "C" relay that may be programmed to activate on system events, and an input loop to monitor conventional Normally Open or Normally Closed contacts. It reports their status to the control panel as multiplex addresses.
  - Current Draw = 1 mA Standby; 1 mA with relay energized.
  - Occupies 2 zones.

- **DS7480:** Bell Supervision Module (1 per system).
  The DS7480 provides a means of monitoring bells. It provides a supervised (polarity reversing) output relay to activate the bell. It also provides a Form "C" Bell Fault Output to be connected to the control panel.
  - Current Draw = 7 mA @ 12 VDC, Standby; 50 mA @ 12 VDC, Alarm.

- **DS7481:** Single Phone Line Monitor (1 per system).
  The DS7481 provides a means of monitoring a single phone line for fault conditions. When a fault is detected, the DS7481 automatically closes its Normally Open relay contacts to provide a means of signaling the fault.
  - Current Draw = 20 mA, Standby; 20 mA, Alarm.

- **DS7488:** Octal Relay Module (2 per system).
  The DS7488 provides 8 Form "C" relay outputs for addition to the system. The outputs are fully programmable and can be activated by system events. Each output operates individually of the other 7 outputs for complete flexibility.
  - Current Draw = 10 mA + 40 mA for each relay when energized.

- **DS7489:** Solid State Output Module (2 per system).
  The DS7489 is a Solid State Octal Driver Module that provides 8 open collector transistor outputs. The outputs are fully programmable and can be activated by system events. Each output operates individually of the other 7 outputs for complete flexibility. The DS7489 Module has not been investigated by Underwriters Laboratories, Inc.
  - Current Draw = 10mA.
  - Outputs: Provides a current sink (the output shorts to common (-) when activated). The maximum current draw for all 8 outputs combined cannot exceed 750 mA.

- **DS9484:** The DS9484 is a Remote Notification Appliance Circuit (NAC) Power Supply designed to add four additional NACs (NFPA 72 Class B, Style Y) to a Fire Alarm Control Panel (FACP). When connected to the Options Bus of the DS7400Xi, it can provide intelligent control of its individual outputs. It supplies 6 A of NAC power through four circuits to drive horn strobe loads. It is UL Listed as a fire accessory for use in Commercial fire applications and as a continuous-load power supply for auxiliary devices.
  - Current Draw = 150 mA, Standby; 6 A maximum, Alarm

- **MX280:** Multiplexed Photoelectric Smoke Detector (up to 120 detectors may be used per system. Requires a DS7430 and occupies one multiplex zone). Detects smoke and automatically determines the detector's sensitivity using the Detection Systems "Chamber Check" feature.
  - Current Draw = 500 µA, Standby; 560 µA, Alarm.

- **MX280TH:** Multiplexed Photoelectric Smoke Detector with a 135°F heat sensor (up to 120 detectors may be used per system. Requires a DS7430 and occupies one multiplex zone). Detects smoke and is equiped with a 135°F heat sensor for high temperature alarms. The Detection Systems "Chamber Check" feature automatically determines the detector's sensitivity.
  - Current Draw = 500 µA, Standby; 560 µA, Alarm.

- **MX280THL:** Multiplexed Photoelectric Smoke Detector with a 135°F heat sensor and a 45°F freeze alarm (up to 60 detectors may be used per system. Requires a DS7430 and occupies two multiplex zones). Detects smoke and is equiped with a 135°F heat sensor for high temperature alarms and a 45°F sensor for freeze alarms. Freeze alarms are reported separately from smoke and high temperature alarms. The Detection Systems "Chamber Check" feature automatically determines the detector's sensitivity.
  - Current Draw = 500 µA, Standby; 560 µA, Alarm.

- **MX540:** Multiplexed Passive Infrared (PIR) Intrusion Detector (DS7473) with a standard range of 40 by 50 feet (12 by 15 meters). Requires a DS7430 and occupies one multiplex zone.
  - Current Draw = 200 µA, Standby; 2 mA, Alarm.

- **MX835** TriTech Microwave/PIR Intrusion Detector with "Pet Avoidance" technology and a standard range of 35 by 35 feet (10.7m by 10.7 m). Requires a DS7430 and occupies one multiplex zone.
  - Current Draw = 6 mA, Standby; 35 mA in "Trouble" and Walk Test mode.

- **MX775** Multiplex Passive Infrared (PIR) Intrusion Detector with (DS7470) a standard range of 50 by 50 feet (15 m by 15 m). Requires a DS7430 and occupies one multiplex zone.
  - Current Draw = 200 µA, Standby; 2 mA in Walk Test mode.

- **MX794** The MX794 is a Long Range Multiplex PIR intrusion (DS7474) Detector with Self-test. The standard ranges are 80 ft. by 50 ft. (24.0 m by 15.0 m) and 200 ft. by 10 ft. (61.0 m by 3.1 m). Requires a DS7430 and occupies one multiplex zone.
  - Current Draw = 800 µA, Standby; 2 mA, Alarm.
- **MX934** Multiplex Passive Infrared (PIR) intrusion detector with (DS7471) a standard range of 35 by 35 feet (10.7 m by 10.7 m). Requires a DS7430 and occupies one multiplex zone.
  - Current Draw = 200 µA, Standby; 2 mA in Walk Test mode.
- **MX938** 360° Ceiling Mount Multiplex PIR Intrusion Detector (DS7472) with a 60 foot (18.3 m) diameter range. Requires a DS7430 and occupies one multiplex zone.
  - Current Draw = 200 µA, Standby; 2.5 mA in Walk Test mode.
- **MX950** Multiplex TriTech Microwave/PIR Intrusion Detector (DS7476) with motion monitor and antimask features and with a standard range of 50 by 50 feet (15 m by 15 m). Requires a DS7430 and occupies one multiplex zone.
  - Current Draw = 6 mA, Standby; 35 mA in "Trouble" and Walk Test mode.
- **RF3222:** 120-zone Wireless Receiver. (up to two receivers per system. Requires use of a DS7430 or DS7436 Multiplex Expansion Module.)
  See the *DS7400Xi (4+) Wireless Reference Guide (P/N: 44575)* for more information.
  - Current Draw = 30 mA

The control/communicator is also available in three package formats. The packages include the following:

- **DS7400XiF:** DS7400Xi in large red enclosure manufactured from 18 Guage (1.2 mm), cold-rolled steel, measuring 15.0 by 20.75 by 4.25 inch (38.1 by 52.7 by 10.8 cm) (HxWxD).
- **DS7400XiFCP:** DS7400XiF package with: DS7420i, DS7447/DS7447E and a AE-TR16
- **DS7400XiCC:** DS7400Xi in an Attack Enclosure.

When installing a UL Listed system, refer to *Section 11.0, Installation Guide for UL Listed Systems*.

2.0 Enclosure Installation

The DS7400Xi control/communicator and the enclosure are shipped together. The control, however, still needs to be installed into the enclosure. Hardware for mounting the enclosure to a wall, and the control to the enclosure is located in its own hardware pack.

2.1 Install the Enclosure

- Use the enclosure as a template and mark the top mounting holes on the mounting surface.
- Pre-start the mounting screws for these two holes. Slide the enclosure onto these mounting screws so that the screws move up into the thinner section of the holes. Tighten the screws.
- Screw in the remaining two screws in either set of bottom mounting holes.
- Knock out the desired wire entrances on the enclosure.

2.2 Install the Control/Communicator

The control is static sensitive. Make sure you touch earth ground before handling the control. This will discharge any static electricity in your body. Example: Run the ground wire to the enclosure before handling the control. Then keep holding the ground wire while installing the control.

- Insert the three support posts into the control retainer holes as shown in the diagram.
- Slide the top of the control into the retainer tabs (the slots under the top frame).
- Once in the retainer tabs, the control will rest on the three support posts.
- Secure the bottom of the enclosure by screwing the bottom three holes through the support posts and through to the control retainer holes.

Once the control is installed, be sure to connect its ground wire to the top hinge of the enclosure (the unpainted tab).

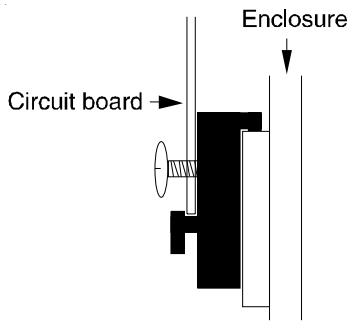

Support Post Assembly

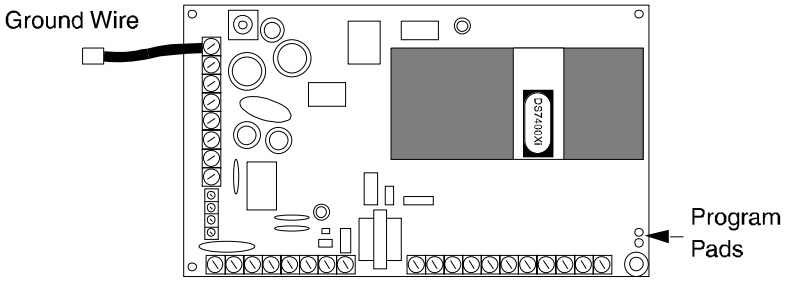

Control/Communicator

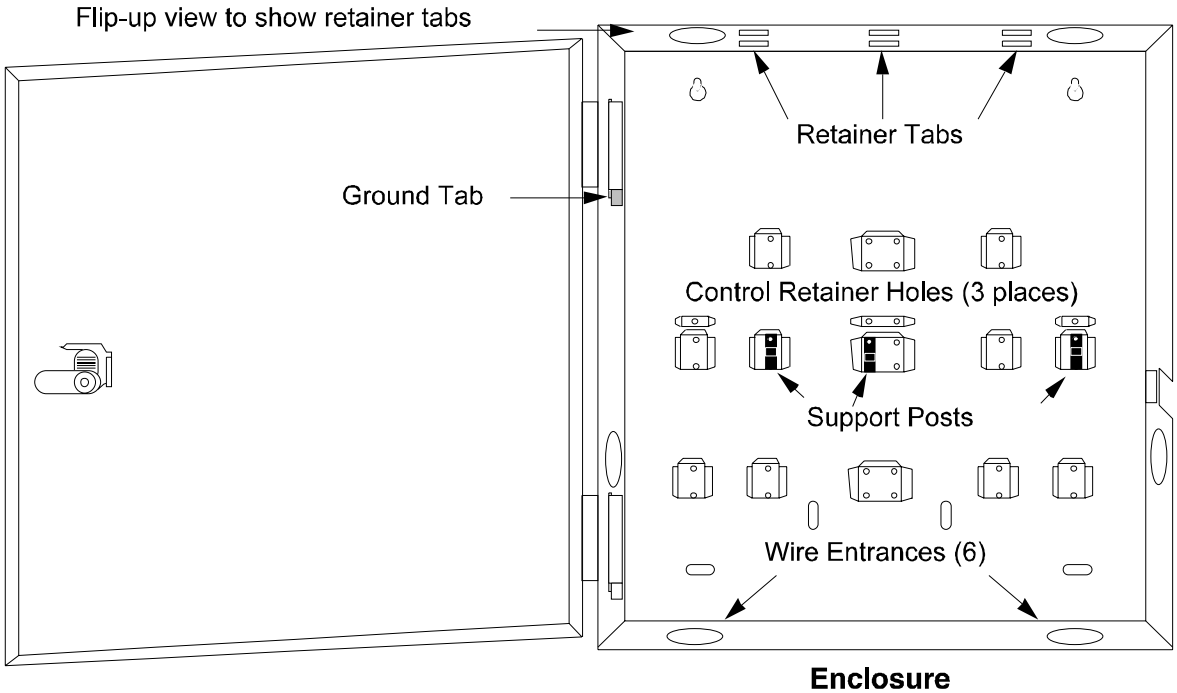

Enclosure

The Battery Terminals and Wires are NOT Power Limited. A ¼ in. (6.4 mm) spacing must be maintained between the battery terminals, battery wiring and all other wiring. Battery wiring may not share the same conduit, conduit fittings or conduit knock-outs with other wiring.

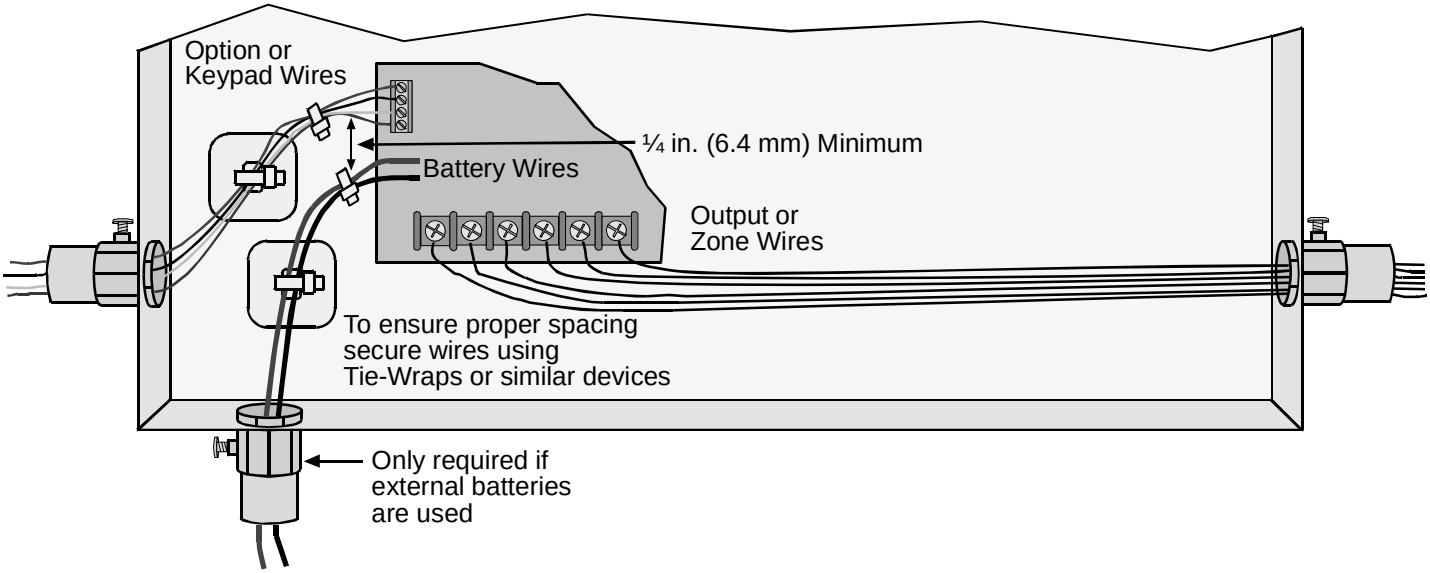

3.0 Control Terminal Wiring


WARNING

Before servicing, remove all power including the transformer, battery and phone line. A complete functional test is required after any programming.


CAUTION

Incorrect connections may result in damage to the unit.

System is Power Limited except for battery terminals. All wiring entering this enclosure must be power limited.

● A/C Power Indication LED

1	⏚	**EARTH GROUND:** Must be connected to a good earth ground such as a cold water pipe and also connected to the cabinet cover, using the supplied wire jumper.
2	⏚	
3	A C	**A/C INPUT:** Use U. L. listed, 18 VAC 50 VA, class 2 transformer. Model TR-1850 requires 50/60 Hz. unswitched dedicated outlet - do not share.
4		
5	–	**ALARM OUTPUT:** Provides 12 VDC, special application, up to 1.75 A for powering bells, siren drivers, etc. Function programmed in address 2734.
6	A	
7	–	**AUXILIARY POWER:** Provides 12 VDC, special application, up to 1.0 A for powering detectors.
8	+	

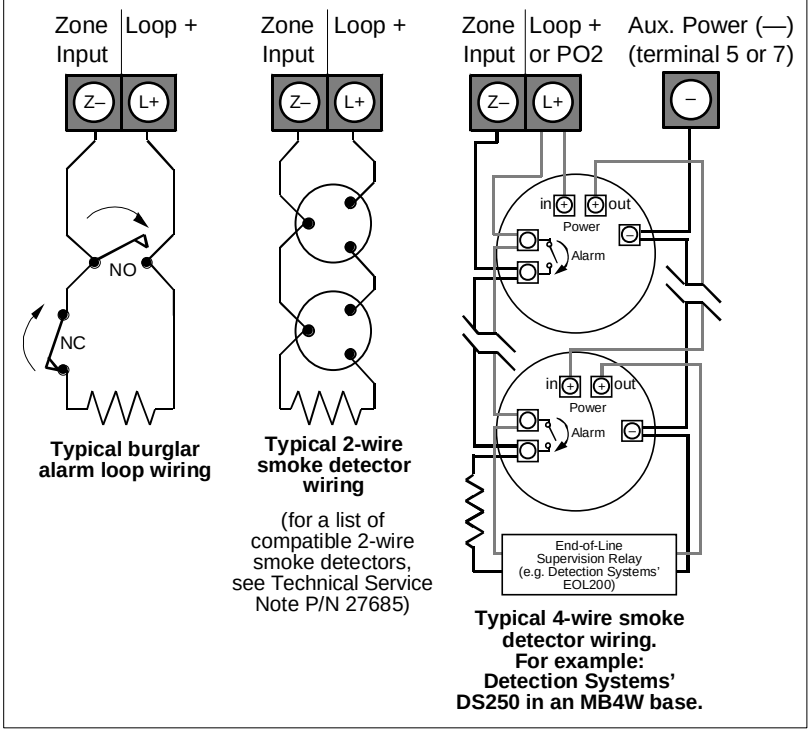

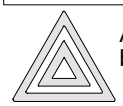
CAUTION

An appropriate two pole disconnect device must be installed by qualified service personnel, as part of the building installation.


CAUTION

Danger of explosion if battery is incorrectly replaced.

Replace with the same or equivalent type recommended by the manufacturer. Dispose of used batteries according to the manufacturer's instructions.

R	OPTION
B	
G	
Y	

OPTION BUS:
Used for options such as the DS7416i Communications Module, the DS7420i Dual Phone Line Module, etc.
Also for keypads #11 - #15.
For Commercial Fire Mode: Option Bus wiring should be in conduit if run ouside the enclosure.

PROGRAMMABLE OUTPUTS:
PO1 shorts to aux. power negative when activated, PO1 can sink up to 1.0 A.
PO1 function programmed in address 2735.

PO2 supplies 12 V and up to 500 mA when activated.
PO2 function programmed in address 2736.

ZONES 1-8: Zones 1-8 are intended for connection of Normally Open or Normally Closed alarm contacts. They may also be used for compatible 2-wire smoke detectors. These zones require a 2.21kΩ resistor (P/N 25899) at the end of the loop. Power is momentarily removed from L+ after a [PIN] + [System Reset] or during a fire verification.
Zone 1-8 assignments are programmed in address 0031-0038.

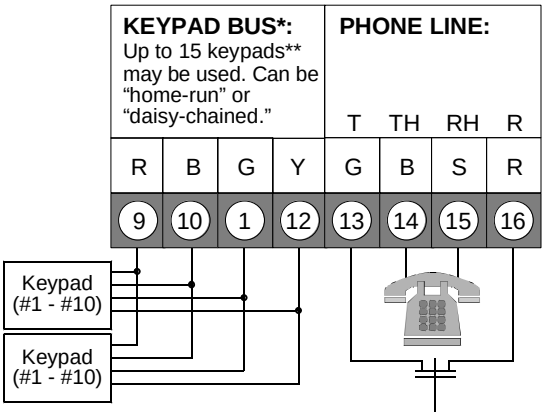

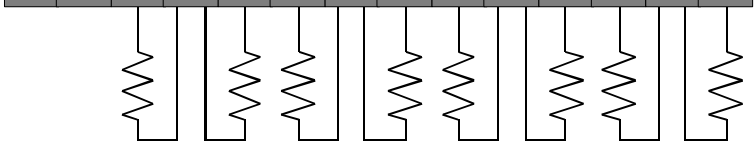

* = Maximum wire length each: 1000 ft. (305 m).
Maximum wire length total in system: 6000 ft. (1830 m) when using #22 AWG (0.8 mm) or #18 AWG (1.0 mm) cable.
** = Keypads #1 - #10 connect to the Keypad Bus and keypads #11 - #15 connect to the Option Bus.

NOTE **Shared cable is not recommended for keypad, multiplex, options bus, telephone, or siren wiring.**

4.0 Hardware Layout Example

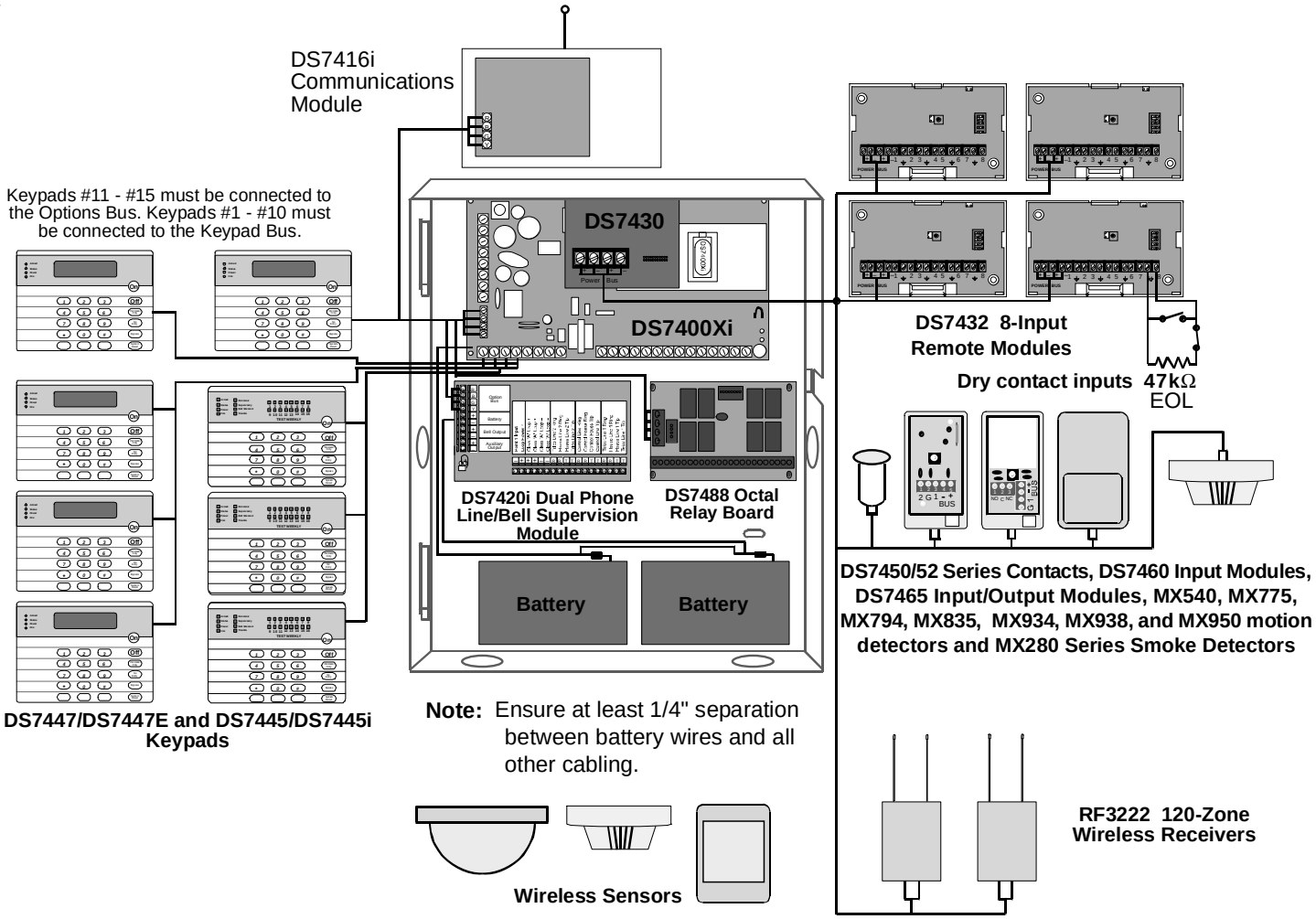

- Up to 15 keypads may be used. Keypads #1 - #10 connect to the Keypad Bus and keypads #11 - #15 connect to the Option Bus. One keypad must be designated as keypad #1 and connected to the Keypad Bus. See the DS7447/DS7447E, DS7445/DS7445i, and DS7448 Installation Instructions for further details.
- A DS7420i (Dual Phone Line/Bell Supervision Module) may be connected to the Control Panel, and placed within the enclosure. Connect to the Options Bus of the control panel. See the DS7420i Installation Instructions for further details.
- Up to 2 DS7488s (Octal Relay Modules) may be connected to the Control Panel, and placed within the enclosure. Connect to the Options Bus of the Control Panel. This provides an additional 8 Form “C” relay outputs for the Control Panel. See the DS7488 Installation Instructions for further details.
- A DS7430 or a DS7436 (Multiplex Expansion Module) may be connected to the control panel via the expansion port. This will allow for the connection of additional zones via the Options Bus. See the DS7430 or DS7436 Installation Instructions for further details.
- Up to 30 DS7432s (8-Input Remote Modules) may be connected to the DS7430 or DS7436. Connect to the Power and Bus Terminals of the Multiplex Expansion Module. This allows for a means of addressing up to 240 input loops of conventional contacts to the Control Panel. See the DS7432 Installation Instructions for further details.
- Up to 2 RF3222 (120-Zone Wireless Receivers) may be connected to the DS7430 or DS7436. Connect to the Power and Bus terminals of the Multiplex Expansion Module. This allows for the monitoring of wireless detectors.
- A DS7416i Advanced Radio Communications Module may be connected to the Control Panel via the Options Bus. This allows for connection to a radio network.
- Up to 248 zones are available for the connection of Single, Multiple, Input/Output, and Multiplex devices. Up to 112 wireless zones (137-248) are also available.

5.0 System Worksheet

Account Number _____ Information

Name _____ Contact Person _____

Address _____ Voice Phone Number _____

_____ Panel Phone Number _____

City, State, Zip _____ Panel Answers Phone ☐ Armed ☐ Disarmed

Equipment Location and Notes

AC Voltage _____ VAC Battery Voltage _____ VDC AUX Current _____ A

Battery Standby _____ Ah Bell Current _____ A

Control Panel _____

Transformer _____

Telephone Jack _____

Telephone On Same Line as Panel _____

Earth Ground Connection _____

Alarm Sounder (s) _____

Misc. Notes

_____

_____

_____

_____

_____

_____

_____

_____

Keypad Location and Notes

Example

	Location	Belongs to Partition	Master/ Standard
Keypad # 1	Kitchen	2	Master

	Location	Belongs to Partition	Master/ Standard		Location	Belongs to Partition	Master/ Standard
Keypad # 1				Keypad # 9			
Keypad # 2				Keypad # 10			
Keypad # 3				Keypad # 11			
Keypad # 4				Keypad # 12			
Keypad # 5				Keypad # 13			
Keypad # 6				Keypad # 14			
Keypad # 7				Keypad # 15			
Keypad # 8							

Personal Identification Number Information

Example
PIN Information

User #	Pin #	Auth. Level	Parti-tions	Name
002	1001	6	1, 2, 4	James L.

PIN Information

User #	Pin #	Auth. Level	Parti-tions	Name
001				
002				
003				
004				
005				
006				
007				
008				
009				
010				
011				
012				
013				
014				
015				
016				
017				
018				
019				
020				
021				
022				
023				
024				
025				
026				
027				
028				
029				
030				
031				
032				
033				

PIN Information

User #	Pin #	Auth. Level	Parti-tions	Name
034				
035				
036				
037				
038				
039				
040				
041				
042				
043				
044				
045				
046				
047				
048				
049				
050				
051				
052				
053				
054				
055				
056				
057				
058				
059				
060				
061				
062				
063				
064				
065				
066				

PIN Information

User #	Pin #	Auth. Level	Parti-tions	Name
067				
068				
069				
070				
071				
072				
073				
074				
075				
076				
077				
078				
079				
080				
081				
082				
083				
084				
085				
086				
087				
088				
089				
090				
091				
092				
093				
094				
095				
096				
097				
098				
099				

Personal Identification Number Information

PIN Information

User #	Pin #	Auth. Level	Parti-tions	Name
100				
101				
102				
103				
104				
105				
106				
107				
108				
109				
110				
111				
112				
113				
114				
115				
116				
117				
118				
119				
120				
121				
122				
123				
124				
125				
126				
127				
128				
129				
130				
131				
132				
133				

PIN Information

User #	Pin #	Auth. Level	Parti-tions	Name
134				
135				
136				
137				
138				
139				
140				
141				
142				
143				
144				
145				
146				
147				
148				
149				
150				
151				
152				
153				
154				
155				
156				
157				
158				
159				
160				
161				
162				
163				
164				
165				
166				
167				

PIN Information

User #	Pin #	Auth. Level	Parti-tions	Name
168				
169				
170				
171				
172				
173				
174				
175				
176				
177				
178				
179				
180				
181				
182				
183				
184				
185				
186				
187				
188				
189				
190				
191				
192				
193				
194				
195				
196				
197				
198				
199				
200				

Zone Location and Notes

Example

	Type *	Zone/Output Function #	Partition & Location
Zone # 1	SZ	Zn Funct. 1	2, Kitchen

* = SZ: Single Zone Input
MZ: Multiple Zone Input
IO: DS7465
(see section 10.3)

	Type *	Zone/Output Function #	Partition & Location
Zone # 1			
Zone # 2			
Zone # 3			
Zone # 4			
Zone # 5			
Zone # 6			
Zone # 7			
Zone # 8			
Zone # 9			
Zone # 10			
Zone # 11			
Zone # 12			
Zone # 13			
Zone # 14			
Zone # 15			
Zone # 16			
Zone # 17			
Zone # 18			
Zone # 19			
Zone # 20			
Zone # 21			
Zone # 22			
Zone # 23			
Zone # 24			
Zone # 25			
Zone # 26			
Zone # 27			
Zone # 28			
Zone # 29			
Zone # 30			

	Type *	Zone/Output Function #	Partition & Location
Zone # 31			
Zone # 32			
Zone # 33			
Zone # 34			
Zone # 35			
Zone # 36			
Zone # 37			
Zone # 38			
Zone # 39			
Zone # 40			
Zone # 41			
Zone # 42			
Zone # 43			
Zone # 44			
Zone # 45			
Zone # 46			
Zone # 47			
Zone # 48			
Zone # 49			
Zone # 50			
Zone # 51			
Zone # 52			
Zone # 53			
Zone # 54			
Zone # 55			
Zone # 56			
Zone # 57			
Zone # 58			
Zone # 59			
Zone # 60			

Zone Location and Notes (continued)

	Type *	Zone/Output Function #	Partition & Location		Type *	Zone/Output Function #	Partition & Location
Zone # 61				Zone # 95			
Zone # 62				Zone # 96			
Zone # 63				Zone # 97			
Zone # 64				Zone # 98			
Zone # 65				Zone # 99			
Zone # 66				Zone # 100			
Zone # 67				Zone # 101			
Zone # 68				Zone # 102			
Zone # 69				Zone # 103			
Zone # 70				Zone # 104			
Zone # 71				Zone # 105			
Zone # 72				Zone # 106			
Zone # 73				Zone # 107			
Zone # 74				Zone # 108			
Zone # 75				Zone # 109			
Zone # 76				Zone # 110			
Zone # 77				Zone # 111			
Zone # 78				Zone # 112			
Zone # 79				Zone # 113			
Zone # 80				Zone # 114			
Zone # 81				Zone # 115			
Zone # 82				Zone # 116			
Zone # 83				Zone # 117			
Zone # 84				Zone # 118			
Zone # 85				Zone # 119			
Zone # 86				Zone # 120			
Zone # 87				Zone # 121			
Zone # 88				Zone # 122			
Zone # 89				Zone # 123			
Zone # 90				Zone # 124			
Zone # 91				Zone # 125			
Zone # 92				Zone # 126			
Zone # 93				Zone # 127			
Zone # 94				Zone # 128			

Zone Location and Notes (continued)

Type *	Zone/Output Function #	Partition & Location	Type *	Zone/Output Function #	Partition & Location
Zone # 129			Zone # 163		
Zone # 130			Zone # 164		
Zone # 131			Zone # 165		
Zone # 132			Zone # 166		
Zone # 133			Zone # 167		
Zone # 134			Zone # 168		
Zone # 135			Zone # 169		
Zone # 136			Zone # 170		
Zone # 137			Zone # 171		
Zone # 138			Zone # 172		
Zone # 139			Zone # 173		
Zone # 140			Zone # 174		
Zone # 141			Zone # 175		
Zone # 142			Zone # 176		
Zone # 143			Zone # 177		
Zone # 144			Zone # 178		
Zone # 145			Zone # 179		
Zone # 146			Zone # 180		
Zone # 147			Zone # 181		
Zone # 148			Zone # 182		
Zone # 149			Zone # 183		
Zone # 150			Zone # 184		
Zone # 151			Zone # 185		
Zone # 152			Zone # 186		
Zone # 153			Zone # 187		
Zone # 154			Zone # 188		
Zone # 155			Zone # 189		
Zone # 156			Zone # 190		
Zone # 157			Zone # 191		
Zone # 158			Zone # 192		
Zone # 159			Zone # 193		
Zone # 160			Zone # 194		
Zone # 161			Zone # 195		
Zone # 162			Zone # 196		

Zone Location and Notes (continued)

Type *	Zone/Output Function #	Partition & Location
Zone # 197		
Zone # 198		
Zone # 199		
Zone # 200		
Zone # 201		
Zone # 202		
Zone # 203		
Zone # 204		
Zone # 205		
Zone # 206		
Zone # 207		
Zone # 208		
Zone # 209		
Zone # 210		
Zone # 211		
Zone # 212		
Zone # 213		
Zone # 214		
Zone # 215		
Zone # 216		
Zone # 217		
Zone # 218		
Zone # 219		
Zone # 220		
Zone # 221		
Zone # 222		
Zone # 223		
Zone # 224		
Zone # 225		
Zone # 226		
Zone # 227		
Zone # 228		
Zone # 229		
Zone # 230		

Type *	Zone/Output Function #	Partition & Location
Zone # 231		
Zone # 232		
Zone # 233		
Zone # 234		
Zone # 235		
Zone # 236		
Zone # 237		
Zone # 238		
Zone # 239		
Zone # 240		
Zone # 241		
Zone # 242		
Zone # 243		
Zone # 244		
Zone # 245		
Zone # 246		
Zone # 247		
Zone # 248		

6.0 Glossary

6.1 General Control Programming

- **Normal Arming** - [PIN] + [On]: If programmed, arms the entire system while allowing entry delays for entry/exit zones.
- **Perimeter Instant Arming** - [PIN] + [No Entry] [Perimeter Only]: If programmed, arms only the perimeter of the system and does not allow entry delays for entry/exit zones.
- **Perimeter Arming** - [PIN] + [Perimeter Only]: If programmed, arms only the perimeter of the system while allowing entry delays for entry/exit zones.
- **Custom Arming** - [PIN] + [#] [4]: If programmed, allows custom arming of the system and bypasses the zone functions specified in data addresses 2725-2728.
- **Maximum Security Arming** - [PIN] + [No Entry] [On]: If programmed, arms the entire system and does not allow an entry delay for entry/exit zones.
- **General Authority by Partition**
  A general (level 2) authority can be programmed to have arm-only authority; arm and bypass authority; arm and disarm authority; or arm, disarm, and bypass authority by partition. This is done at addresses 3421-3424.
  - Arm-only access by partition allows someone with a General Authority to arm zones in a partition he can not disarm.
  - This level can still be used to arm, disarm, and bypass zones in the other partitions that it has access to.
- **Closing Ring-Back**: If programmed, the keypad sounders and Bell will activate for 2 seconds after the system is armed and the closing report is successfully sent. This requires Closing Ring-Back and Closing Report to be programmed.
  - If a closing report is not programmed, the control will test for a dial tone when the system is armed. If the test passes, the system will arm normally. If the test fails, the system will arm, but will indicate a trouble condition.
  - The DS7447/DS7447E keypad will display “Communication Err” after [#] [8] [7] is entered.
- **Siren on Comm. Fail for Silent Zone:** If programmed, a silent zone will sound the alarm outputs if the zone is in an alarm condition and the system fails to communicate with the central station.
- **Restore when Sounders Silence**: If programmed, a zone sends a restoral report and is ready to activate again only after the burglary bell cut-off time expires or the bells are silenced.
  - The zone can alarm multiple times per armed period.
- **Restore when Zone Restores**: If programmed, a zone sends a restoral report and is ready to activate again as soon as it physically restores.
  - This zone can alarm multiple times per armed period.
- **Restore when System Disarms**: If programmed, a zone sends a restoral report when the system is disarmed.
  - It can only alarm once per armed period.
- **Allow Swinger Shunts:** If programmed, a zone can only alarm or trouble up to three times per armed period. After the third alarm or trouble, the zone will be bypassed and a bypass report will be sent.

NOTE: Swinger Shunts are **not** allowed on UL Certificated Installations.

6.2 Zone Function Programming

- **Zone Function**
  A Zone Function is the description of how a particular zone will behave (e.g. steady alarm output, bypassing allowed, alarm on short, trouble on open, perimeter instant).
  - There are many possible zone functions. Up to 30 different zone functions are allowed per control.
  - Zone functions may be custom made as needed.
  - Each zone must be programmed as a specific zone function. Any number and combination of zones may be programmed as particular zone functions.
  - Program zone functions at addresses 0001-0030.
- **Invisible Alarms**: This is a zone programmed not to have an alarm output or an alarm display at any keypad when activated. An alarm signal will be sent, but the DS7447/DS7447E keypad display will read “Not Ready” while this zone is violated.
  - Invisible Alarm zones are recommended for holdup alarms.
- **Silent Alarms**: This is a zone programmed to activate the visual display at the keypad, but not audible signals.
  - If this zone is also an entry zone, an entry tone will sound when this zone is activated.
- **Bypassing Allowed**: This is a zone programmed to allow bypassing (shunting). This is done using the bypass command or the force-arming sequence.
- **Alarm on Short**: This is a zone programmed to activate an alarm when its loop is shorted.
- **Alarm on Open**: This is a zone programmed to activate an alarm when its loop is opened.
- **Trouble on Open**: This is a zone programmed to activate a trouble when its loop is opened and the system is disarmed.
  - If the system is armed, this zone will activate an alarm if shorted or opened.
  - For 24-hour zones, regardless of the arming state of the panel, this always remains as a Trouble on Open.
- **Trouble on Short**: This is a zone programmed to activate a trouble when its loop is shorted and the system is disarmed.
  - If the system is armed, this zone will activate an alarm if shorted or opened.
  - For 24-hour zones, regardless of the arming state of the panel, this always remains as a Trouble on Short.
- **Interior Delayed**: This is a zone programmed to be ignored during the entry/exit delay period. If it is violated when the system is armed, it will activate a delay for the programmed entry delay time. The keypad pre-alert sounders will activate and the system may be disarmed during this delay period. If the system is not disarmed during this delay period, this zone will activate an alarm. This zone is bypassed by Perimeter Instant or Perimeter Armed.
- **Perimeter Instant**: This is a zone programmed to activate an alarm even during the entry/exit delay period.
- **24-Hour**: This is a zone programmed to activate when its loop is faulted, even if the system is disarmed.
- **Entry/Exit Delay #1:** This is a zone programmed to be ignored during the entry/exit delay period.
  - If it is violated while the system is armed, it will activate a delay for the amount of time programmed for entry delay time #1 (address 4028). The keypad pre-alert sounders will activate and the system may be disarmed during this delay period.
  - If the system is not disarmed during the entry period, this zone will activate an alarm.

- **Entry/Exit Delay #2:** This is a zone programmed to behave identical to the Entry/Exit Delay #1 zone function except that it uses entry delay time #2 (address 4029).

NOTE: If both entry delays have been activated, the control will use the shorter entry delay.

- **Entry/Exit Delay Cancel Zone Functions**
  Entry/Exit Delay Cancel 1 and Entry/Exit Delay Cancel 2 Zone Functions cause the exit delay to expire as soon as the premises is vacated.
  - If a zone is programmed as an Entry/Exit Delay Cancel zone, and it is activated during the exit delay, the exit delay will expire as soon as the zone has been restored.
  - Entry/Exit Delay Cancel 1 follows entry delay 1.
  - Entry/Exit Delay Cancel 2 follows entry delay 2.

- **Interior Entry/Exit Follower**: This is a zone programmed to be ignored during an entry/exit delay and then become an interior instant zone.
  - If this zone is violated while the system is armed and no entry/exit zones have been violated, it will activate an alarm.
  - If this zone is violated after an entry/exit delay zone is violated, it will follow that entry/exit delay time.
  - This zone is bypassed by Perimeter Instant or Perimeter arming.

- **Interior Home/Away:** This is a zone programmed to become an interior instant zone if the system is armed and an entry/exit delay zone is violated during the exit delay time.
  - If the system is armed and an entry/exit delay zone is not violated, this zone will be bypassed.
  - This zone is bypassed by Perimeter Instant or Perimeter arming.

- **Interior Instant**: This is a zone programmed to activate an alarm even during the entry/exit delay periods.
  - It is bypassed by Perimeter Instant or Perimeter arming.

- **Day Monitor**: This is a zone programmed to be a perimeter instant zone when the system is armed.
  - When the system is disarmed, any violation of this zone will activate the keypad sounders which will sound continuously until a disarm command sequence is entered.
  - The alarm outputs for this zone will not activate and there will be no report for this zone when the system is disarmed.

- **Keyswitch Input**: This is a zone programmed to allow the system to be armed or disarmed using a Normally Open momentary keyswitch.
  - Outputs for keyswitch LEDs and sounders are available using the programmable outputs or the Octal relay outputs.
  - An output is needed for each LED and sounder.
  - A keyswitch will only control the partition that these zones are assigned to unless programmed as a master, then it will control all at once. See Program Address 0001, Data Digit 1.
  - Keyswitches and keypads may be used in the same partition, if desired.

- **Fire Zone**: This is a zone programmed to activate if the system is armed or disarmed.
  - It can be silenced (not reset) by entering a valid [PIN] + [Off].
  - The display will indicate a Fire Alarm for this zone on all keypads in every partition.
  - A fire reset command must be entered after silencing the alarm to re-enable this zone.
  - If this zone is programmed for trouble and the loop opens, the DS7447/DS7447E keypad will display “Fire Trouble” for this zone and the keypad sounders will beep once every ten seconds.
  - If the system is a combination fire and burglar alarm, the fire alarm has priority over the burglar alarm.

- **Fire Zone with Verification**: This zone is identical to a Fire Zone except that after the first alarm, it will perform a fire reset and then wait up to two minutes for a second alarm.
  - If a second alarm occurs within this two minute period, the system will indicate a fire alarm.
  - If there is no second alarm within this two minute period, the control panel will reset back to its normal condition.

NOTE: Use of this control’s alarm verification feature is not permitted for applications in the state of California.

- **Water Flow Zone**: This is a zone programmed to operate like a Fire Zone, but is specifically intended for water flow switches.
  - An optional retard timer can be programmed to compensate for changes in water pressure. If the timer is used, the water flow zone must be activated for the complete time period; an alarm will be initiated at the end of the timer period.
  - The maximum combined water flow delay of the control panel and the device must not exceed two minutes.

NOTE: Any zone can be a water flow zone, but only zones 1 through 4 may be programmed as delayed water flow zones.

- **Supervisory Zone**: This is a zone programmed to accommodate shut-off valves.
  - It will indicate a supervisory condition at the keypads when activated.

6.3 Zone Programming

- **Zone**
  A Zone is an input to the DS7400Xi Control/Communicator.
  - There are 8 hardwired zones on the main circuit board.
  - Additional zones may be added by using the DS7433 (8 zone expansion module), the DS7430 (multiplex loop module), and/or other modules.

- **Single Zone Input**: This is an individual zone such as the on-board zones and multiplex contact zones.

- **Multiple Zone Input**: This is a zone connected to one of the 8-Input Modules (DS7432 or DS7433) or to a Dual Zone Module (DS7460).
  - The inputs are programmed separately (see the separate Programming Addresses Worksheet, P/N: 29802).
  - When using the Dual Zone Module (DS7460), loop A is always programmed as an odd numbered program address (ending in 1, 3, 5, 7, or 9). Loop B is the even numbered program address that follows loop A.

- **DS7465**: This is the input zone or the output relay on a DS7465. The odd numbered zone is programmed for the input zone function and the even numbered zone is programmed for the output function.

- **Multiplex Smoke:** This is a multiplexed input zone (zones 9-248) that is used with a MX280 series smoke detector. This zone must have a Zone Function of Fire Zone and Trouble on Open applied to the multiplex smoke zone.

- **Multiplex Smoke with Low Temperature:** This zone is used with the MX280 series smoke detectors with a low temperature alarm. Making this selection requires the programming of two zones as follows:

- **Smoke alarm**. This must be the odd numbered zone of the zone pair required for these devices. The zone must be programmed with a zone function that is set for Fire Zone and Trouble on Open.
- **Low Temperature Alarm**. This must be the even numbered zone of the zone pair required for these devices. This zone must be programmed with a zone function that is set as Supervisory and Trouble on Open.

6.4 Output Programming

- **Latch on Any Zone Alarm**: This is an output programmed to activate upon any zone alarm (including invisible zones) and will latch until the system has been disarmed.
  - If this output is programmed to respond only to a fire zone, it will remain latched until the fire reset command is performed.
- **ON during Entry Pre-Alert**: This is an output programmed to activate when an entry/exit zone is violated while the system is armed.
  - It will remain activated until the system is disarmed, or until the entry delay time has expired.
- **ON for 10 seconds** after [PIN] + [System Reset] is entered: This is an output programmed to activate for 10 seconds after the fire reset command is entered at the keypad or if a Fire Zone with Verification activates.
  - This output is intended to be used to power 4-wire smoke detectors or any other device that requires a power interruption to reset an alarm condition.

NOTE: When Programmable Output 2 is programmed this way, it will normally supply auxiliary power and will turn OFF for 10 seconds when the fire reset command is entered.

- **ON when System is Armed**: This is an output programmed to activate when the system is armed.
  - It will remain activated until the system is disarmed.
- **Ground Start**: This is an output programmed to activate for 3 seconds when the phone line is seized. It is intended for use with ground start phone systems that require a momentary short to ground to obtain a dial tone.
  - Connect a separate 12 VDC, DPDT relay.
  - Connect both relay contact commons to ground, and connect the Normally Open of each contact to terminal positions 13 and 16 (one to terminal 13, the other to 16) of the DS7400Xi.
  - This output follows all partitions regardless of how data digit 2 of the output programming address is programmed.
  - Not intended for UL Listed systems. Not for use with phone line monitors.
- **System Status (ready to arm)**: This is an output programmed to follow the Status LED of the keypad.
  - It will activate when the system is ready to arm with no zones violated.
- **Zone Alarm**: This is an output programmed to activate when a zone is in an alarm condition.
  - It will remain activated until the system is disarmed or the bell cut-off time expires.
  - This output is intended to activate alarm bells and sirens.
  - This will not activate from Silent or Invisible Zones.
- **Zone Alarm Delayed by 20 sec.**: This is an output programmed to wait 20 seconds after a zone enters an alarm condition to activate.
  - It will remain activated until the system is disarmed or the bell cut-off time expires.
  - This output is intended to activate alarm bells and sirens, but provides a delay to allow the user to silence the system before it activates.
- **Output Functions**
  Output Functions can be programmed to follow system events or to follow one or two specific zones in a “cross-matrix” fashion (see Input/Output Cross-Matrixing).
  - These Output Functions can be programmed to control Octal Relay outputs or Multiplex Bus outputs.
  - Output Functions are programmed in addresses 2772-2843.
- **Input/Output Cross Matrixing**
  Input/Output Cross Matrixing allows Output Functions to follow the status of specific input zones (zones 1 through 248 only).
  - Outputs can be programmed to follow any combination of one or two zones, open or closed, with the system armed or disarmed.
  - If programmed to latch, the output will latch until a valid PIN is entered at the keypad.
- **Keypad Sounder Output**: This is an output programmed to follow the keypad sounder.
  - It activates during the entry pre-alert and during any day monitor alarm. It does not follow momentary keypad beeps such as keystrokes, chimes, etc.
- **Access Output**: This is an output programmed to activate for 10 seconds when an access control PIN is entered at the keypad.
  - Not UL Listed for Access Control (UL294).

- **Panic/Duress Output**: All outputs, including the three on-board outputs, the Octal Relays, and the Output Functions, support a Panic/Duress function. This output will follow Duress activations, Keypad Emergency Keys B and C, and Invisible and Silent Zone alarms. It will only be reset by a user acknowledgement and will not reset after the burglary bell time-out occurs. Duress activations will latch until acknowledged by a user.

- **Multiplex Bus Outputs**
  The DS7400Xi supports up to 60 DS7465 Input/Output Modules.
  - These modules are connected to the multiplex bus and provide one input loop and one Form “C” output relay.
  - The input loop operates the same as all other multiplex inputs.
  - The output loop can be programmed to follow Output Functions.
  - Multiplex Bus outputs can be bypassed using the bypass function. If an output zone is bypassed while it is ON, it will turn OFF. The bypass will not be removed when the system is armed and then disarmed; it must be cancelled by entering the bypass command again or by cancelling all bypasses.

NOTE: DS7465 Module outputs will not pulse, even if programmed to do so.

- **Octal Relay Modules (DS7488)**
  The DS7400Xi can support two Octal Relay Modules.
  - Each relay can be programmed to follow system-wide events or Output Functions as described above.
- **Solid State Output Modules (DS7489)**
  The DS7400Xi can support two Solid State Output Modules.
  - Each output can be programmed to follow system-wide events or Output Functions as described above.

6.5 Partition Control Programming

- **Partition Control Programming**: Up to eight partitions may be used. They are assigned (program address 3420) in order.

- For example: When using only one partition, it is partition one. When using three partitions, they are partitions one, two, and three.
- Partitioning allows the system to act as up to 8 different systems.
- Zones, keypads, outputs, and other items may be assigned to particular partitions.
- Access to partitions may be through each partition's keypad or through a Master keypad (**see the User's Guide P/N: 43851 for more details**).

• **Common Area**: Partition 1 can be programmed as a common area, that is, common to other partitions. This allows it to be used in an installation with one common entry area such as a foyer or vestibule.
- When Partition 1 is programmed as a common area, it will only arm when all the partitions it is common to are armed.
- The common area will disarm when any of the partitions it is common to are disarmed - only if the user has access to the common area.
- When using a common area, a Master keypad should be used and assigned to the common area (see keypad assignment programming).

6.6 Keypad Assignment Programming

• **Keypad Assignment**: The keypad type and the partition it is assigned to must be programmed.
- Each program address (3131-3138) programs the keypad type for two keypads. For example: for address 3131, data digit 1 is for keypad 1, data digit 2 is for keypad 2.
- Each program address (3139-3146) programs the partition assignment for two keypads. For example: for address 3139, data digit 1is for the partition assignment of keypad 1, data digit 2 is for the partition assignment of keypad 2.
- Users must have access to the partition the keypad is assigned to in order to use the keypad.

• **Master Keypad Programming** : A Master keypad can be used to access all the partitions.
- It will display the arm/disarm status of all the partitions and can be used to individually control each partition (see section 7.6).
- A Master keypad can be assigned to any of the partitions.
- Any number of the 15 allowable keypads can be a Master keypad.
- When using the common area, it is suggested that a Master keypad be used and that it is assigned to the common area.

6.7 Emergency Key Programming

NOTE: Do not label these keys if they are unprogrammed. Only the "A" key may be programmed and labeled as the Fire key. These keys are not intended to substitute for Listed manual pull boxes.

• **Fire Key**: The emergency key (key A) at the bottom left of the keypad entry area is the Fire Key. If programmed, the key will activate a fire alarm when pressed for 2 seconds.
- It may be programmed for a steady or pulsed alarm.

NOTE: The Fire Key will generate the fire alarm sounders in the partition that activated the Fire Key. Any other partitions in use will only have their keypad sounders activated. All keypad displays will be the same.

• **Special Emergency Key**: The emergency key (key B) at the bottom center of the keypad entry area is the Special Emergency Key.
- If programmed, the key will activate a supplementary or an auxiliary type alarm when pressed for 2 seconds.
- It may be programmed for a silent, steady, or pulsed alarm.

• **Panic Key**: The emergency key (key C) at the bottom right of the keypad entry area is the Panic Key.
- If programmed, the key will activate a panic alarm when pressed for 2 seconds; nothing will display at the keypad to indicate an alarm.
- It may be programmed for a silent, steady, or pulsed alarm.

NOTE: The Special Emergency Key and the Panic Key will generate the alarm sounders only in the partition of the keypad that activated that Key.

6.8 Custom Arming Programming

• **Custom Arming - [PIN] + [#] [4]**: If programmed, the [PIN] + [#] + [4] command sequence may be used to custom arm the system by arming only certain zone functions.
- For example: All interior zones plus some perimeter zones may be bypassed while leaving some of the perimeter armed.

6.9 Force Arming

• **Force Arming**: If programmed, allows violated zones to be force armed. When force arming, the user must enter the usual arming command followed by the [Bypass] key. This automatically bypasses zones that are violated and programmed as bypassable.
- Fire zones, supervisory zones, keyswitch zones, waterflow zones, and non-bypassable zones can not be force armed.
- Not available in UL Listed systems.
- See Program Address 2732.

6.10 Ground Fault Detect Programming

• **Ground Fault**: If programmed, this function will allow the system to detect ground faults. This function is required for fire panels and will be forced on when the panel is in the commercial fire mode.
- See Program Address 2732.

6.11 Commercial Fire Mode Programming

NOTE: In a system that includes both fire alarm and burglar alarm devices, the system must produce distinct sounds for fire and burglar alarm conditions either by using different indicating appliances or by using distinct cadences for the same appliance.

• **Commercial Fire Mode**: When in Commercial Fire Mode, the control panel will perform some functions (e.g. communications) differently to conform with commercial fire regulations.
- See Commercial Fire Mode Programming, program address 2733.

• **Water Flow Zone Delay**: This is the amount of time a water flow zone must be violated before the control panel will initiate an alarm.
- The delay is necessary to accommodate normal changes in water pressure.
- If the water flow initiating device incorporates its own time delay, do not program the control panel unit to exceed 120 seconds combined time delay.

- **Pulsing Fire Zone**: This is a zone programmed to output a pulse for a fire alarm in the normal manner (one second ON, one second OFF).
- **California March Time**: This is a zone programmed to output a pulse for a fire alarm in the California Time cadence (ten 1/2 second pulses, followed by one second of quiet time).
- **Temporal**: This is a zone programmed to output a pulse for a fire alarm in the Temporal cadence (three 1/2 second pulses, followed by one second of quiet time).
- **Single Keypad Use**: The keypad should be used on the keypad bus and be mounted to the front of the control enclosure OR if within the same room as the control equipment with the wire run in conduit (or equivalently protected against mechanical injury) within 20 ft. (6.1 m) of the control equipment.
  - This keypad should be assigned as address 1.
- **Multiple Keypad Use**: <u>One keypad only</u> must be used on the option bus, at any address from 11 - 14, and must meet the following requirements:
  - The keypad must be mounted to the front of the control enclosure OR mounted within the same room as the control equipment and the wire is run in conduit (or equivalently protected against mechanical injury) within 20 ft. (6.1 m) of the control equipment.
  - All other keypads should be connected to the keypad bus and may be placed as needed (within the noted wiring limitations in the installation manual).
  - One keypad must be assigned as address 1.

6.12 Open/Close Report Control Programming

- **Open and Close Reports**: If programmed, these reports are sent when the system is armed or disarmed. They may be sent independently for the opening and closing of each partition, or the first partition to open and the last partition to close may send the reports.
- **Send Trouble at Close for Bypassed Zones**: If programmed, a trouble report will be sent for each zone bypassed when the system is armed.
- **Alternate between both Phone Numbers**: If programmed, open and close reports will be sent to phone number one first. If phone number one does not pick-up, the control panel will alternate to phone number two. If phone number two does not pick-up, the control panel will alternate back to phone number one. It will alternate between both phone numbers until successful.

6.13 Report Programming

- **Reports**: For pulse formats, reports are programmed by entering data in the reporting and extended digits. The report will send the data programmed for each event. For SIA and Contact ID, the report formats are fixed and may be activated by placing a 1 in the reporting digit.
  - To disable a report, enter a 0 in the reporting digit.
  - To send the Man No. along with Open and Close reports, program an "F" (enter [*] [5] at the keypad) in the extended digit.
- **Keypad Fire Alarm**: This report is sent when a fire alarm has been activated by the “A” emergency key.
- **Keypad Fire Restoral**: This report is sent when a keypad fire alarm has been restored using the [System Reset] command.
- **Keypad Emergency Alarm**: This report is sent when an emergency alarm has been activated using the “B” emergency key.
- **Keypad Panic**: This report is sent when an emergency alarm has been activated using the “C” emergency key.
- **Keypad Tamper:** For keypads fitted with a wall tamper switch, this report is sent when the keypad is removed from the wall.
- **Keypad Tamper Restoral:** For keypads fitted with a wall tamper switch, this report is sent when the keypad is properly replaced on the wall after experiencing a tamper condition.
- **Zone Function Alarm**: An alarm report is sent when a zone alarm occurs. Alarm reports are enabled by zone function. Program this report for any zone functions you wish to send an alarm report about. For local zones (no reports), do not program an alarm report. The zone number will automatically be sent for this report in SIA or Contact ID format.
- **Zone Function Restoral**: This report is sent when the zone alarm and trouble conditions are cleared. The zone number will automatically be sent for this report in SIA or Contact ID format.
- **Zone Function Trouble**: This report is sent when a zone trouble condition occurs. This can be an open circuit, if the zone is programmed for “trouble on open”, a multiplex tamper switch being activated, or a multiplex zone not communicating with the control panel. The zone number will automatically be sent for this report in SIA or Contact ID format.
- **Zone Function Bypass:** This report is sent when a zone is bypassed. (Note: Fire zones can never be bypassed.) Zone bypass reports for non-24 hour zones are sent with the closing report. Bypass reports for 24 hour zones are sent when the zone is bypassed. If a zone is force armed, the bypass report is sent with the partial close report. If a 24 hour or non-24 hour zone is custom armed, the bypass report is sent with the partial close report.
- **Zone Function Bypass Restoral:** This report is sent when the zone bypass is cleared. For non-24 hour zones the bypass restoral is sent with the open report. Bypass restoral reports for 24 hour zones are sent when the zone is manually restored. The bypass restoral report for a zone that was force armed is sent when the zone is restored. If a 24 hour or non-24 hour zone was custom armed, the bypass restoral is sent with the open report.
- **Open**: This report is sent when the system has been disarmed. In SIA or Contact ID formats, the user number for the person who disarmed the system will be sent with this report. To send the user number along with an Open report in other formats, program the extended digit of the report as *5. In Contact ID format, the partition number will also be sent along with this report. The Open report will only be sent if a Close report was sent previously.
- **Close**: This report is sent when the system has been armed. In SIA or Contact ID formats, the user number for the person who armed the system will be sent with this report. To send the user number along with a Close report in other formats, program the extended digit of the report as *5. In Contact ID format, the partition number will also be sent along with this report.
- **Duress**: This report is sent when the system is disarmed using a duress code. The user number is not sent with this report.
- **Partial Close**: This report is sent when the system is armed partially, or force armed.
- **First Open After Alarm**: This report is sent when the system is disarmed after an alarm has occurred.

- **Low Battery**: This report is sent when a low battery condition occurs.
- **Battery Restoral**: This report is sent when a low battery condition restores.
- **AC Fail**: This report is sent when an AC failure condition occurs. This report may be delayed in address 4034.
- **A/C Failure Report Delay**
  The A/C power loss report can be programmed to delay for up to 254 minutes (see address 4034). (The same delay would also apply to the A/C restoral report.)
  - If another report is sent during this delay period, the A/C fail report will be sent along with this report.
  - If the A/C power restores during this delay period, the A/C loss report will not be sent.
  - Programming address 4034 as FF causes the report to be sent at a random interval of at least 15 minutes, but no more than 2 hours after the A/C failure occurs.
- **AC Restoral**: This report is sent when an AC failure condition restores.
- **Communicator Test/System Normal**: This report is sent at the 24-hour check-in time if there is not a control trouble, an active fire alarm that has not been acknowledged, a fire trouble, or a supervisory condition. Note: To send a Communicator Test even if one of these conditions exists, program the Communicator Test/System Off Normal.
- **Remote Program Successful**: This report is sent after a Remote Program session, if the session was terminated properly.
- **Remote Program Unsuccessful**: This report is sent after a Remote Program session, if some error has occurred or the session did not terminate properly.
- **Local Program Successful**: This report is sent when local programmer's mode is exited and there is no error associated with the programming.
- **Local Program Unsuccessful**: This report is sent when local programmer's mode is exited and there has been some error associated with the programming.
- **System Trouble**: This report is sent when a control trouble condition occurs.
- **System Trouble Restoral**: This report is sent when all system trouble conditions restore.
- **Communicator Test/System Off Normal**: This report is sent at the 24-hour check-in time if there is a control trouble, an active fire alarm that has not been acknowledged, a fire trouble, or a supervisory condition.
- **Exit Error**: This report is sent if an exit error occurs. An exit error occurs when an entry/exit zone is still violated at the end of the exit delay. If this happens, the entry delay will begin and any output programmed to activate an alarm will energize. If the system is not disarmed before the entry delay expires, an alarm report for the effected zone will be sent and the Exit Error report will be sent. If this report is not programmed, the control will not sound the exit error warning.
- **Recent Closing**: This report is sent, along with any alarm reports, when there is an alarm within the first five minutes after the system has been armed.
- **System Walk Test**: This report is sent when a system test has been started ([#] [8] [1] key sequence). Zone reports are sent during a system test.
- **System Walk Test Restoral**: This report is sent when the system test has been completed or has timed-out.
- **Fire Walk Test**: This report is sent when a Fire Walk Test has been started ([#] [9] [1] key sequence). Zone reports are not sent during a Fire Walk Test.
- **Fire Walk Test Restoral**: This report is sent when the Fire Walk Test has been completed or has timed-out.
- **Mux. Smoke Low Temperature Report**: This supervisory report is sent when a MX280 Series smoke detector with a low temperature feature detects a temperature of 45°F (7.5°C) or less for a period of 30 minutes or more.
- **Mux. Smoke Low Temperature Restoral**: This report is sent when a MX280 Series smoke detector with a low temperature alarm determines that the temperature has risen above 45°F (7.5°C).
- **Dirty Chamber Report**: This report is sent when a MX280 Series smoke detector fails to pass the "Chamber Check®" sensitivity test.
- **Dirty Chamber Restoral**: This report is sent when a MX280 Series smoke detector has been returned to normal operation after service.

6.14 Phone Number General Control Programming

- **Enable Remote Programmer Callback**: If programmed, when the remote programmer tries to initiate a session with the panel, the panel will hang up and call the remote programmer phone number.
  - Ensures the correct remote programmer is initiating the call.
- **Dial Pulse on all Phone Numbers**: If programmed, the panel will dial phone number 1, 2, and the remote programmer phone number 3 using the pulse format.
- **Dial Tone on all Phone Numbers**: If programmed, the panel will dial phone number 1, 2, and the remote programmer phone number 3 using the tone format.

6.15 Phone Answering Programming

- **Answering Machine Bypass**: This feature allows the panel to answer incoming calls when answering machines are used. If the line rings, stops ringing, then rings again within one minute, the panel will seize the phone line on the first ring.
- **Phone Answering Programming**: The panel can be programmed to answer the phone after a selected number of rings for remote programming access. It can also be programmed to answer the phone after a different number of rings when in armed or disarmed states.
  - This can be used to call the panel location and determine its arming state.

6.16 FCC Compliance Notice

This equipment has been tested and found to comply with the limits for a Class A digital device, pursuant to Part 15 of the FCC Rules. These limits are designed to provide reasonable protection against harmful interference in a residential installation. This equipment generates, uses and can radiate radio frequency energy and if not installed and used in accordance with the instructions, may cause harmful interference to radio communications. However, there is no guarantee that interference will not occur in a particular installation. If this equipment does cause harmful interference to radio or television reception, which can be determined by turning the equipment off and on, the user is encouraged to try to correct the interference by one or more of the following measures:

- Re-orient or relocate the receiving antenna.
- Increase the separation between the equipment and the receiver.
- Connect the equipment into an outlet on a circuit different from that to which the receiver is connected.
- Consult the dealer or an experienced radio/TV technician for help.

6.17 FCC Phone Connection Notice To Users

This control complies with Part 68 of the FCC rules.

On the inside of the enclosure is a label that contains, among other information, the FCC Registration Number and the Ringer Equivalence Number (REN) for this equipment. You must, upon request, provide this information to your local telephone company.

The REN is useful to determine the quantity of devices that may be connected to your telephone line and still have all of those devices ring when your telephone number is called. In most, but not all areas, the sum of the REN's of all devices connected to one line should not exceed five (5.0). To be certain of the number of devices that you may connect to your line, you may want to contact your local telephone company to determine the maximum REN for your local calling area.

This equipment may not be used on coin service provided by the telephone company. This control should not be connected to party lines.

Should this equipment cause harm to the telephone network, the telephone company may discontinue your service temporarily. If possible, they will notify you in advance. But if advanced notice isn't practical, you will be notified as soon as possible. You will be informed of your right to file a complaint with the FCC. The telephone company may make changes in its facilities, equipment, operations, or procedures that could affect the proper functioning of your equipment.

If they do, you will be notified in advance to give you an opportunity to maintain uninterrupted telephone service.

If you experience trouble with this equipment, please contact the manufacturer for information on obtaining service or repairs.

The telephone company may ask that you disconnect this equipment from the network until the problem has been corrected or until you are sure that the equipment is not malfunctioning. The repairs to this equipment must be made by the manufacturer and not the user.

To guard against accidental disconnection, there is ample room to mount the Telco jack to the inside of the Control cabinet.

The operation of this Control may also be affected if events such as accidents or acts of God cause an interruption in telephone service.

6.18 Canadian Dept. of Communications

General Installation Requirements: Notice: The Canadian Department of Communications label identifies certified equipment. This certification means that the equipment meets certain telecommunications network, protective, operational, and safety requirements. The Department does not guarantee the equipment will operate to the user's satisfaction.

Before installing this equipment, users should ensure that it is permissible to be connected to the facilities of the local telecommunications company. The equipment must also be installed using an acceptable method of connection. In some cases, the company's inside wiring associated with a single line individual service may be extended by means of a certified connector assembly (telephone extension cord). The customer should be aware that compliance with the above conditions may not prevent degradation of service in some situations.

Repairs to certified equipment should be made by an authorized Canadian maintenance facility designated by the supplier. Any repairs or alterations made by the user to this equipment, or equipment malfunctions, may give the telecommunications company cause to request the user to disconnect the equipment.

Users should ensure, for their own protection, that the electrical ground connections of the power utility, telephone lines, and internal metallic water pipe system, if present, are connected together. This precaution may be particularly important in rural areas.

Users should not attempt to make such connections themselves, but should contact the appropriate electric inspection authority, or electrician, as appropriate.

Terminal Requirements: The Load Number (LN) assigned to each terminal device denotes the percentage of the total load to be connected to a telephone loop which is used by the device, to prevent overloading. The termination on a loop may consist of any combination of devices subject only to the requirement that the total of the Load Numbers of all the devices does not exceed 100. The Load Number of the DS7400Xi is 2.

RFI Requirements: This Class A digital apparatus meets all requirements of the Canadian Interference-Causing Equipment Regulations. [Cet appareil numerique de la classe A respecte toutes les exigences du Reglement sur le material broilleur du Canada.]

6.19 For Installations in New Zealand

Two-wire Connection:
The operation of this equipment on the same line as telephones or other equipment with audible warning devices or automatic ring detectors will give rise to bell tinkle or noise and may cause false tripping of the ring detector. Should such problems occur, the user is not to contact Telecom Faults Service.

7.0 Operating Guide

For additional information on operating this system, consult the DS7400Xi (Ver. 4+) User's Guide (P/N: 43851) and the front cover of this Reference Guide.

7.1 Emergency Procedures

7.1.1 Identifying Alarm Sounds

Your alarm system may be programmed for a steady alarm sound or a pulsed alarm sound. It is important to learn the difference between a fire alarm sound and an intrusion alarm sound before you are confronted with an actual emergency.

7.1.2 Silencing Alarms

All alarms can be silenced with any PIN that has disarm privileges. Entering your [PIN]+ [Off] will silence the alarm and turn off (disarm) the control.

7.1.3 A Cautionary Note

How you respond to an alarm will depend, mostly, on the type and time of the alarm. You should seek the advice of your installing company as they install your system, not later (e.g. after an alarm) to develop a response plan.

7.1.4 Use Common Sense

Above all else, common sense should prevail. If there is any threat or hint of danger to yourself or others on the premises, such as in the event of a fire alarm, everyone should be instructed to leave the premises immediately. Do not enter the premises unless accompanied by the appropriate Emergency Services' personnel, or after they have given the OK to enter.

7.1.5 Caution When Entering a Building

If the bells and sirens are on and/or the red Armed Light is flashing with the DS7447/DS7447E display reading "Zone Alarm" or the DS7445/DS7445i having its zone LEDs flashing, then the keypad is signaling that an alarm has occurred. The keypad will also issue a pulsed tone during the entry delay instead of the usual steady tone.

If the alarm has not been previously investigated, do not enter the building unless accompanied by the appropriate Emergency Services' personnel.

7.1.6 Fire Alarms

Fire Alarms are silenced using the same procedure as intrusion alarms: a [PIN] (with disarm privileges) plus the [Off] key.

The Fire Alarm system is not reset until alarms at smoke detectors are cleared by using the [System Reset] command. The Fire Alarm system will not be functional until this procedure has been followed. See the "Fire Reset" section, 7.2.

7.2 Fire Reset/Fire Trouble

7.2.1 Fire Reset

During a fire alarm, exit the premises immediately. When you have determined there is no fire, you may silence the bells/sirens before you initiate the [System Reset] command: [PIN] + [System Reset]. Before the [System Reset] command is used, determine which smoke detector has alarmed so the monitoring company may verify its operation.

NOTE: To use the System Reset command sequence, your PIN must have disarm privileges. The System Reset command will perform a fire reset, a battery test, and will clear all system troubles.

NOTE: If the System Reset command has not been performed after 24 hours of the Fire Alarm, the keypad will sound and it will display "Fire Alarm Not Reset." If the sounders have been silenced and the system has been reset properly, this warning will not occur.

7.2.2 Fire Trouble

A Fire Trouble message with a zone number signifies a problem with the fire system, such as a break in the wiring that monitors smoke detectors. A Fire Trouble message with no zone number indicates a ground fault if the unit is in the commercial fire mode.

A Fire Trouble will be indicated by a short beep from the keypad sounders every 10 seconds. The DS7447/DS7447E will display "Fire Trouble" followed by the zones in a trouble condition. The DS7445/DS7445i will turn the Fire and Trouble Lights on steady and will light the corresponding zone LEDs.

Notify your installing company immediately if the Fire Trouble message is displayed.

The Fire Trouble beep can be silenced with any [PIN] plus the [Off] key. After problems have been remedied, a [PIN] plus the [Off] key should again be entered to clear the "Fire Trouble" display.

7.2.3 Dirty Smoke

A Dirty Smoke display, followed by a zone number and accompanied by a beep every ten seconds indicates that the smoke detector for that zone requires cleaning or replacement. The smoke detector will also give a Dirty indication by flashing its LED once per second. The Dirty Smoke beep can be silenced by any [PIN] plus the [Off] key.

Notify your installing company immediately if the Dirty Smoke message is displayed.

7.3 Emergency Keypad Alarms

The Emergency Alarm Keys [A], [B], and [C] may generate Fire, Special Emergency, and Panic Alarms if programmed by the installer.

Ask your installing company to explain the function of these keys.

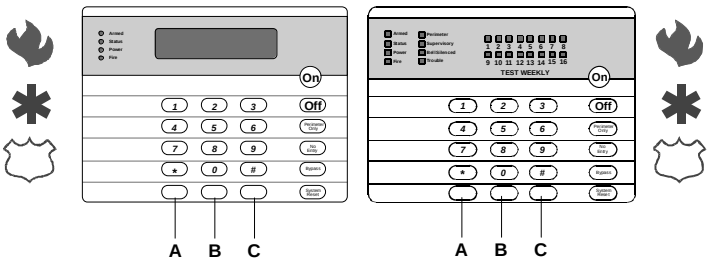

When using the Emergency Keys, they must be pressed for two seconds to generate an alarm.

NOTE: If the Emergency Alarm Keys are to be used, they should be labeled to signify their functions.
The A key should be labeled as the Fire key. This is the only key that may be designated as the Fire key.
The B key should be labeled as the Special Emergency key.
The C key should be labeled as the Panic key.

Use the Disarming Command Sequence to cancel or silence these alarms.

7.4 Fire Safety

No fire detection device or system should be considered 100% foolproof.

This fire alarm system can provide early warning of a developing fire. Such a system, however, does not ensure protection against property damage or loss of life resulting from a fire. Any fire alarm system may fail to warn for any number of reasons (e.g. smoke not reaching a detector that is behind a closed door).
When considering detectors for residential applications, refer to NFPA Standard 72, “The National Fire Alarm Code.” This standard is available at a nominal cost from: The National Fire Protection Association, Batterymarch Park, Quincy, MA 02269.

7.4.1 If Installed in Family Residences

Adherence to the NFPA Standard 72 can lead to reasonable fire safety when the following items are practiced:

- Minimize hazards: Avoid the three traditional fire killers: smoking in bed, leaving children home alone, and cleaning with flammable liquids.
- Providing a fire warning system: Most fire deaths occur in the home, the majority, during sleeping hours. The minimum level of protection requires smoke detectors to be installed outside of each separate sleeping area and on each additional story of the dwelling.

For added early warning protection, it is recommended that detectors be installed in all separated areas including the basement, bedrooms, dining room, utility room, furnace room, and hallways.

7.4.2 Having and Practicing an Escape Plan

A fire warning may be wasted unless the family has planned in advance for a rapid and safe exit from the building.

- Draw a floor plan of the entire house showing two exits from each bedroom and two from the house. Since stairwells and hallways may be blocked during a fire, the plan should provide exits from bedroom windows.

Make copies of the plan and practice it with all family members.

- Pre-arrange a meeting place outside and away from the residence. Once out of the building, all occupants should immediately go to the pre-selected location to be accounted for.
- Provide a barricade between family members and fire, smoke, and toxic gases (e.g. close all bedroom doors before retiring).
- Children should be instructed on opening their bedroom windows and exiting safely from the building. If exiting is not possible, they should be taught to stay at the open window and shout for help until it arrives.
- In the event of a fire alarm after retiring, wake the children by shouting to them from behind your closed door. Tell them to keep their bedroom doors closed.
- If the top of your bedroom door is uncomfortably hot, do not open it. There is most likely fire, intolerable heat, or smoke on the other side. Shout to all family members to keep their bedroom doors closed and to exit the building via alternate routes.
- If the top of the door is not uncomfortably hot, brace the bottom of the door with your foot, and the top with one hand, then open the door about one inch. Be prepared to slam the door shut if there is any pressure against the door or if any hot air rushes in.
- If there is no evidence of excessive heat or pressure, leave the room and close the door behind you. Shout appropriate instructions to all family members and immediately leave the building via the pre-planned routes. If heavy smoke is present, drop to your hands and knees, or crawl to remain below the smoke level.

7.4.3 Installation Considerations

Proper location of detection devices is one of the most critical factors in a fire alarm system.

The following are some general considerations:

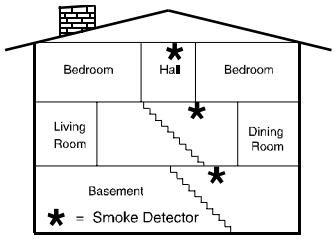

A smoke detector should be located on each story including basements, but excluding crawl spaces and unfinished attics.

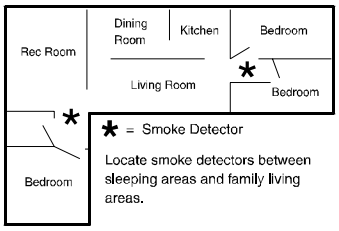

Locate smoke detectors between sleeping areas and family living areas.

- Smoke detectors should not be installed in “dead air” spaces or close to ventilating or air conditioning outlets because smoke may be circulated away from the detector. Locations near air inlets should be favored.
- Avoid areas subject to normal smoke concentrations such as kitchens, garages, or near fireplaces.
- Do not install smoke detectors where normal area temperatures are above 100° F (38° C) or below 32° F (0° C).
- Areas of high humidity and dust concentrations should be avoided.
- The edge of ceiling mounted detectors should be no closer than 4 inches (10 cm) from any wall.
- Place the top edge of wall mounted detectors between 4 and 12 inches (10 to 30 cm) from the ceiling.

7.5 Personal Identification Numbers

7.5.1 General Information

A PIN (Personal Identification Number) is the 4- or 6-digit code users must enter at the keypad to gain access to the system. Your system has the capability to assign up to 200 PINs, each four or six digits long. A PIN may be assigned to each User Number.

PINs should never be programmed with common sequences such as 1 2 3 4, 1 1 1 1, or 2 4 6 8 because they are easily violated.

A User Number is the number that identifies each person using the system. There are 200 possible User Numbers available for use (001 through 200).

Each User Number can have only one PIN assigned to it. Attempting to assign the same PIN to multiple User Numbers will result in the three-beep error tone, and the entry will not be made.

User Number 001 is designated as a Master code. It can be used to add, delete, or change other PINs. It will always have access to all partitions regardless of how it is programmed.

User Number 001 is shipped from the factory with the PIN of 1 2 3 4. If your system has been reprogrammed for 6-digit PINs, the PIN for User Number 001 will be 123456. **This PIN should be changed to one of your personal preference and must be programmed as a Master code.**

A Master code is one of the available authority levels which can be assigned to a user to determine which functions that user will be able to perform. The available authority levels are:

0 = **Master:** Can enter all commands, add or change PINs in assigned partitions, change the time and date, bypass, arm, disarm, perform system tests, system reset and view history. User Number 001 must have the Master authority level. Any or all PINs can behave as a Master code.

1 = **Unlimited:** Can enter all commands, bypass, arm, disarm, system reset and perform system tests. It can not change PINs.

2 = **General:** Can bypass, arm and disarm. It can not change PINs, system reset, enter [#] [7] or any of the [#] [8] functions.

3 = **Arm Only:** Can arm the system with [PIN] + [ON] arming sequence only. It can not perform any other functions, including disarming.

4 = **Temporary:** Valid only for a specified time (the PIN will disappear upon expiration date). It can arm and disarm the system, but can not perform any other functions. If this is done from a Master keypad, you must be in Single Partition Mode. If access is assigned to more than one partition, you must enter a Temporary PIN expiration date for all assigned partitions (see Changing the Expiration Date for Temporary PINs).

5 = **Duress:** When the system is disarmed using the duress code, a silent report is sent to your monitoring service. The Duress code is intended to be used when the user is forced to disarm the system.

6 = **Access Code:** When a PIN with an Access Code is entered, any output programmed for Access Output (i.e. door strikes) will pulse on for 10 seconds (works when the system is armed or disarmed).

7.5.2 Programming PINs

PINs can only be added, changed, or removed in Master Programming Mode, so they are **not** programmable from an RF (wireless) keypad.

You should write down your entries before you enter the Master Code Programming Mode and have them with you as you begin programming. Make your entries promptly. If a long delay occurs in your entries, the 3-beep error tone occurs and exits you from the programming mode.

It is recommended that all PIN programming procedures be performed at a DS7447/DS7447E keypad since this keypad will provided visual prompts throughout the programming sequence. **No visual clues will be given from a D7445/DS7445i keypad.** When the programming sequence is successfully completed, both the DS7447/DS7447E and DS7445/DS7445i keypads will signal the seccessful completion with a long beep.

To add or change a PIN:

- Enter Master Programming Mode (press [Master PIN] + [#] [0]).
- Enter a 0 for PIN Setup programming (press [0]).
- Enter the User Number (enter a 3-digit number from 001 to 200).
- Enter the Authority Level (enter a number from 0 to 6).
- Enter the Area(s) (Partitions) to which this user will have access (press [1], [2], [3], [4], [5], [6], [7], and/or [8] followed by [#]).
- Enter the PIN (enter any 4- or 6-digit number; do not **press [#]**).
- Enter the PIN again followed by [#].

To set the expiration date for an existing Temporary PIN:

- Enter Master Programming Mode (press [Master PIN] + [#] [0]).
- Enter a 3 for Date of Code Expiration Setup programming (press [3]).
- Enter the Expiration Month (press [0] [1] for January through [1] [2] for December).
- Enter the Expiration Day (press [0] [1] through [3] [1]). *The Temporary PIN will expire at Midnight on the day selected.*
- Enter the Year (enter the last two digits of the year followed by [#]).

NOTE: Entering the command sequence [Master Code] [#] [0] [3] [#] will cause the DS7447/DS7447E keypad to read back the temporary code expiration date.

To remove a PIN:

- Enter Master Programming Mode (press [Master PIN] + [#] [0]).
- Enter a 0 for PIN Setup programming (press [0]).
- Enter the User number of the PIN to be cancelled, followed by [#] (enter a 3-digit number from 001 to 200, then press [#]).

NOTE: User Number 001 can not be disabled in this manner.

7.6 The Master Keypad

7.6.1 General Information

Your system may include a Master keypad. A Master keypad is a DS7447/DS7447E keypad programmed to give a user access to all the partitions the user has access to, not just the partition in which the Master keypad is located. This is different from a Standard keypad in that Standard keypads only give access to the single partition in which they are located. Commands entered at the Master keypad will affect all the partitions to which the user has access. If this is not desirable, the Master keypad can also be used to control each partition individually; this is called Single Partition Mode. Single Partition Mode allows a user to control any or all of the partitions the user has access to on an individual (one-by-one) basis (see section 7.6.3 for more information on Single Partition Mode).

NOTE: In order to use the Master keypad, your PIN must be assigned to the partition in which the Master keypad is located.

7.6.2 Master Keypad Displays

Master keypad displays will differ slightly from Standard keypads. The Master keypad display will scroll the Status of each partition, followed by the partition number. For example, if all partitions are armed, the Master keypad will scroll through the following displays:

Armed area 1	Armed area 2	Armed area 3	Armed area 4	Armed area 5	Armed area 6	Armed area 7	Armed area 8

If only partitions 1, 2, 3, 4, 6, and 8 are armed, the Master keypad will scroll through the following displays:

Armed area 1	Armed area 2	Armed area 3	Armed area 4	Ready to Arm area 5	Armed area 6	Ready to Arm area 7	Armed area 8

Displays for partitions that are Not Ready will display in the same manner.
The chart at the bottom of this page will help you understand what each LED function of the Master keypad represents.

7.6.3 Single Partition Mode

Single Partition Mode is used to control partitions on a “one at a time/one by one” basis from the Master keypad.

To enter the Single Partition Mode, enter your [PIN], then press the [#] key twice. This will call up the first partition you have access to. Enter the command sequence you wish for this partition. You do not need to use your PIN again. To move on to the next partition you have access to, press the [#] key twice.

To exit the Single Partition Mode, hold the [*] key down for 2 seconds. The system will also automatically drop out of Single Partition Mode after 40 seconds without a keypad entry.

Example of accessing Single Partition Mode

- Enter your [PIN], followed by the [#] key twice: [1] [2] [3] [4] [#] [#].
- The first partition you have access to will be displayed: **“Ready to Arm. Cafeteria.”**
- Complete the command sequence (in this case arming) you wish for this partition: [#] [On].
- Move to the next partition you have access to by pressing the [#] key twice: [#] [#].
- The next partition you have access to will be displayed: **“Ready to Arm. Office.”**
- Complete the command sequence you wish for this partition.
- After you have completed all the command sequences for the partitions you have access to, exit Single Partition Mode by pressing the [*] key for two seconds.

7.6.4 Arming from the Master Keypad

To arm *all* the Partitions to which you have access:

- [PIN] + any Arming Command Sequence. This will arm all the partitions to which you have access even if they are already armed.

To arm *only some* of the Partitions to which you have access:

- [PIN] + [#] + [#]. This puts you into Single Partition Mode.
- The first partition to which you have access is displayed: “Ready to Arm. Cafeteria.”
- Enter the Arming Command Sequence you want for this partition.
- [#] + [#] opens the next partition to which you have access.
- The next partition to which you have access is displayed: “Ready to Arm. Office.”
- Enter the Arming Command Sequence you want for this partition.
- After arming any or all partitions to which you have access, you may exit Single Partition Mode by holding the [*] key for at least two seconds. The system will also drop out of Single Partition Mode after 40 seconds without a keypad entry.

7.6.5 Disarming from the Master Keypad

To disarm *all* the Partitions to which you have access:

- [PIN] + [Off]. This will disarm all the partitions to which you have access even if they are already disarmed.

To disarm *only some* of the Partitions to which you have access:

- [PIN] + [#] + [#]. This puts you into Single Partition Mode.
- The first partition to which you have access is displayed: “Armed. Cafeteria.”
- If you wish to disarm this partition, enter [Off]. If not, go to the next step.
- [#] + [#] opens the next partition to which you have access.
- The next partition to which you have access is displayed: “Armed. Office.”
- If you wish to disarm this partition, enter [Off]. If not, go to the next step.
- After disarming any or all partitions to which you have access, you may exit Single Partition Mode by holding the [*] key for at

LED	Off	Flashing	On
Armed (red)	All partitions are disarmed.	One or more partitions are armed, or an alarm has occurred.	All Partitions are armed, and no alarms have occurred.
Status (green)	Not ready to arm (if the Armed LED is On, all partitions are armed).	One or more zones are bypassed.	All partitions are ready to arm.
Power (green)	The Control Panel has lost all power; no AC or battery.	Control Panel problems exist. See *Error Displays.*	Normal Operation. The Control Panel is running on AC power with no problems,
Fire (red)	There are no fire alarms.	A fire zone is in alarm.	A fire trouble condition exists.

least two seconds. The system will also drop out of Single Partition Mode after 40 seconds without a keypad entry.

7.7 Keypad Error Displays

7.7.1 General Information

Display	Meaning
DS7445/DS7445i: Power LED flashing *DS7447/DS7447E:* Control Trouble Enter #87	There is an Error Message. To display the message, enter [PIN] + [#] [8] [7].
DS7445/DS7445i: LED 1 On *DS7447/DS7447E:* AC Power Failure	There is a power failure, and the panel is operating on backup battery power.
DS7445/DS7445i: LED 2 On *DS7447/DS7447E:* Battery Trouble*	If the system has just been through a power failure, wait at least two hours for the battery to recharge, the enter [PIN] + [System Reset] to perform a battery test,
DS7445/DS7445i: LED 3 On *DS7447/DS7447E:* Communicator Err**	The communicator failed to communicate with the Central Station.
DS7445/DS7445i: LED 4 On *DS7447/DS7447E:* System Fault	Internal error in the control circuitry or optional circuitry. See System Faults.
DS7445/DS7445i: LED 5 On *DS7447/DS7447E:* Keypad Fault	One of the keypads is not responding to the Control Panel.
DS7445/DS7445i: LED 6 On *DS7447/DS7447E:* Keypad Tamper	One of the keypad housings has been opened.
DS7445/DS7445i: LED 7 On *DS7447/DS7447E:* Multiplex Bus	The multiplex bus is defective or has been shorted.
DS7445/DS7445i: LED 8 On *DS7447/DS7447E:* Aux. Power Fault	The auxiliary power has been shorted.
DS7445/DS7445i: not applicable *DS7447/DS7447E:* Zone Trouble	One of the zones is not responding to the Control Panel. This may also be displayed during power-up; if so, ignore it.
DS7445/DS7445i: not applicable *DS7447/DS7447E:* RF	Indicates a problem with an RF (wireless) zone.
DS7445/DS7445i: not applicable *DS7447/DS7447E:* Dirty Chamber	One of the multiplex smoke detectors has failed the sensitivity test and may require cleaning or replacement. The keypad beep may be cleared by entering [PIN] + [Off].

Error Displays can only be read when the control is disarmed. Some Control Panel Errors, such as battery trouble and any RF troubles, will cause the keypad sounders to beep every 10 seconds. The keypad sounders may be silenced for 4 hours by entering:

[PIN] + [Off].

The sounders will continue to resound until the problem is fixed. To Clear a display, enter:

[PIN] + [System Reset].

Clear the Error Display only on the advice of your installing company or if you are certain the problem has been remedied.

NOTE: System faults may be read from any keypad because they are system-wide. All other Error Displays are limited to the partition the standard keypad is in. If you are on a Master keypad, you may read Error Displays one partition at a time.

7.7.2 System Faults

System faults are designated as follows:

[#] [8] [7] will display	[#] [8] [9] will display
RAM Fault	System Fault 01
ROM Fault	System Fault 02
EEPROM Fault	System Fault 03
Ground Fault	System Fault 04
2Ph/Bell Fault = loss of communication to DS7420i	System Fault 10
Line 1 Fault = DS7420I phone line 1 fault	System Fault 11
Line 2 Fault = DS7420I phone line 2 fault	System Fault 12
Bell Fault = DS7420i bell circuit fault	System Fault 13
Aux. Relay Fault = DS7420I auxiliary relay fault	System Fault 14
Oct. Relay Fault = loss of communication to DS7488	System Fault 20
Reserved for older panels	System Fault 50
AR IB Queue Full = modem buffer full	System Fault 51
AR Host Down = network data switch down	System Fault 52
AR Unreg. Modem = modem not registered	System Fault 53
AR Power Fail = power source below defined threshold	System Fault 54
AR Network Lost = loss of network	System Fault 55
AR Modem HW Err = modem hardware error	System Fault 56
AR Modem SW Err = modem software error	System Fault 57
AR Opt. Bus Err = loss of communications to ARDIS module	System Fault 58
AR Corrupt MSG = message error	System Fault 59

7.7.3 Event History

The History Buffer stores the last 400 events in memory. The DS7447/DS7447E can display all of these events. If this test is performed from a Master keypad, it must be in Single Partition Mode. The DS7445/DS7445i will only display those zones (1-8) that have alarmed since the last Event History Readback. The RF3341 cannot display history events.

To readback the Event History Buffer:

- Press [PIN] + [#] [8] [9]. On a DS7447/DS7447E keypad, the last event to take place will be displayed. On a DS7445/DS7445i keypad, the zone LEDs for any zones that have alarmed since the last Event History Readback in that partition will flash.
- Scroll through the events using the [9], [6], and [#] keys as follows: To begin scrolling back through the events, press the [#] key. The [#] key will scroll you back through the history line by line. The [9] key will scroll you back in reverse chronological order by event. A [6] will scroll you back up through the events (toward the most recent) by event.
  Each event consists of two or three lines or display screens. The first line/screen will be the event title and user. The second line/screen will be the date of the event or the change being made. If there is a third line/screen, it will be the date of the change.

NOTE: When performing this from a Master keypad, each partition will display its own history.

- To exit the Event History Mode, press the [*] key or wait 20 seconds and the keypad will exit automatically.

7.8 Testing Your System

7.8.1 Zone (System Walk) Test

The Zone Test is used to confirm that detectors will report alarms to the keypad. A Zone Test works on all zones, except 24-hour zones and fire zones. While the keypad is in a Zone Test, no control panel alarms will activate an alarm, except 24-hour zone alarms and fire alarms; these will override the Zone Test function.

To perform a Zone Test:

- Press [PIN] + [#] [8] [1].
  - The DS7445/DS7445i zone LEDs of any untested zones will flash.
  - The DS7447/DS7447E displays “Test Zone” followed by the zone number of any zones that have not been tested.
- Pick any untested zone and manually cause a detector to alarm using a method specified in the detector’s Installation Instructions.
  - The DS7445/DS7445i zone LED for the zone currently being tested will turn on steady.
  - The DS7447/DS7447E displays “Now Testing” followed by the zone number of the zone that is currently being tested.
- Clear the alarm condition from the detector using a method specified in the detector’s Installation Instructions, and trigger an alarm on the next detector in that zone. Continue until all detector’s in that zone have been tested.
  - As each zone is tested, its DS7445/DS7445i zone LED turns off.
  - As each zone is tested, the DS7447/DS7447E display returns to “Test Zone” and indicates the remaining untested zones.
- Test each zone.
- Exit the Zone Test using [PIN] + [#].

7.8.2 Battery Tests

You may perform a test of the battery and the local sounder or just test the battery. If these tests are performed from a Master keypad, it must be in Single Partition Mode. System Tests are not available from RF (wireless) keypads.

To initiate a Local Battery / Sounder Test:

- Press [PIN] + [#] [8] [5]. All keypad LEDs will turn on. The keypad sounder and all alarm sounding devices will operate for two seconds. If the test fails, the control panel will indicate a control problem. See ***Error Displays*** on page 30.

NOTE: If power in your building has been off recently, wait two hours for the battery to recharge and then try again.

To initiate a Battery Test:

- Press [PIN] + [System Reset]. The control panel will perform a battery test. The control panel will report a Low Battery or a Low Battery Restoral if necessary.

7.8.3 Communicator Test

This test is available only if the system transmits alarms and system information to a monitoring service, and has been programmed by the security installing company to permit communicator tests. This test can be performed from a Master Keypad. The account code for partition #1 will be used. System Tests are not available from RF (wireless) keypads.

To initiate a Communicator Test:

- Press [PIN] + [#] [8] [2]. A long beep will sound. A “Test” report is sent to the monitoring service. If the test fails, the keypad sounder will sound continuously. To silence the sounder, press [System Reset].

NOTE: This test may take several minutes to complete because the control panel will try ten attempts.

7.8.4 Fire Walk Test

This test is used to confirm that Smoke detectors will report alarms to the keypads. The Fire Walk Test tests all fire zones, including verified fire and waterflow.

At the start of the Fire Walk Test a Fire Walk Test report, if programmed, is sent to the central station. Fire alarm reports are not sent to the central station during the Fire Walk Test. A Fire Walk Test restoral is sent upon completion of the Fire Walk Test.

The Fire Walk Test is enabled for 20 minutes once it is started. The test time is extended to 20 minutes every time another zone is tested.

When a fire zone is tested, any output programmed to follow that zone will activate for 5 seconds.

To perform a Fire Walk Test:

- Press [PIN] + [#] [9] [1].
  - The DS7445/DS7445i zone LEDs of any untested zones will flash.
  - The DS7447/DS7447E displays “Fire Test” followed by the zone number of any zones that have not been tested.
- Pick any untested zone and manually cause a detector to alarm using a method specified in the detector’s Installation Instructions.
  - The DS7445/DS7445i zone LED for the zone currently being tested will turn on steady.
  - The DS7447/DS7447E displays “Fire Testing” followed by the zone number of the zone that is currently being tested.
- Clear the alarm condition from the detector using a method specified in the detector’s Installation Instructions, and trigger an alarm on the next detector in that zone. Continue until all detector’s in that zone have been tested.
  - As each zone is tested, its DS7445/DS7445i zone LED turns off.
  - As each zone is tested, the DS7447/DS7447E display returns to “Fire Test” and indicates the remaining untested zones. *
- Test each zone as instructed by your installing company.
- Exit the Zone Test using [PIN] + [#].

NOTE: A Fire Walk Test will prevent the system from sending any Fire Reports during the test.

8.0 How to Program the Control Panel

8.1 Entering the Programmer's Mode

To enter the Programmer's Mode, enter the Programmer's Code followed by [#] [0]. Shorting the program pads (see section 2.0 for location) on the control panel will also activate Programmer's Mode.

NOTE: The factory set default Programmer's Code is [9] [8] [7] [6]. If the system has been reprogrammed for 6-digit PINs, the default Programmer's Code will be [9] [8] [7] [6] [5] [4].

8.2 Reading Back a Program Address

Once you are in the programmer's mode, to read back the value of a Program Address, enter that Program Address followed by [#]. Each data digit is displayed one data digit at a time. To view the second data digit, enter the # button again.

The display will look like this:

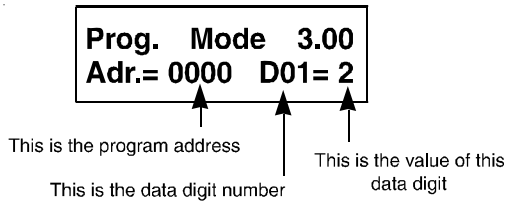

8.3 Entering a Value in a Program Address

To enter a value in the Program Address, enter the Program Address, then enter the value for each Data Digit, then enter [#] to save it and move on to the next Program Address. Entering data digit 1 will increment you to the next data digit.

The display will show the Program Address and will display the value of each Data Digit after you enter it. The data will be programmed (saved) when you press the [#] key. The control panel will automatically increment to the next program address.

- If you wish to program that next address, enter the necessary information.
- If you wish to read back the value of that address, press the [#] key.
- If you wish to program a different address, press the [*] key two times and enter the program address you wish to program.

If you make a mistake at any time, press the [*] key two times (before pressing the [#] key). This will clear the display, allowing you to enter the program address you wish to work with.

8.4 HEX values

Some Data Digit values will be higher than 9. These values must be programmed by pressing the [*] key followed by some other number. These values will display as HEX characters (A - F) when entered. Example: entering *0 at the keypad will display an A.

The HEX character values are as follows:
*0 = A *1 = B *2 = C *3 = D *4 = E *5 = F

8.5 Defaults

The DS7400Xi is shipped from the factory as a working, pre-programmed control. Many of the programming addresses may already be set to the values you need. The default values are shown in Reverse Print.
If the value you would like is in Reverse Print, you don't need to re-program this address.

In the example, a "0" is the default value:

	0	1	2	3	4	5	6
Feature 1	●			●	●		●
Feature 2		●		●		●	●
Feature 3			●		●	●	●

If the default value is not shown in Reverse Print, it will be shown in a separate table.

8.6 Setting the Control to the Factory Default

CAUTION

Only enter [0] [1] [#] in Program Address 4058 when you are completely sure you want to erase all installer programming. Entering [0] [1] [#] in Program Address 4058 will immediately reset the control to the factory default. Any programming already done by the installer will be erased. This action cannot be reversed.

To set the control's programming values back to the default, enter the programming mode, then enter [4][0][5][8][0] [1] [#].

8.7 Exiting the Programmer's Mode

To exit the Programmer's Mode, press the [*] key for a minimum of 2 seconds. If no keypad entries are made for 4 minutes, the control will automatically exit you from the Programmer's Mode.

9.0 Understanding the Programming Charts

The Programming Reference Guide makes use of three types of charts. Each is described below.

If the chart looks like this, a combination of features is available to be programmed for that particular address.

	Enter the Data Digit as a:							
Select Options	0	1	2	3	4	5	6	7
Feature 1	●		●		●		●	
Feature 2		●		●		●		●
Feature 3			●	●			●	●
Feature 4					●	●	●	●

Enter one of these numbers for the appropriate data digit

The dots represent which options/features are included with each selection

Example:
To select **Feature 2** only, enter the data digit as a 1.
To select **Feature 2** and **Feature 4**, enter the data digit as a 5.

Identifies the options/features available for this address

If the chart looks like this, only a single feature is available to be programmed for that particular address.

Represents the option/feature available for this address.

Example:
To select **Disabled**, enter the data digit as a 0.
To select **Entry/Exit Delay #2**, enter the data digit as a 4.

Select Option	DD
Disabled	0
Perimeter Instant	1
24-Hour	2
Entry/Exit Delay #1	3
Entry/Exit Delay #2	4

Enter one of these numbers for the appropriate data digit

Some pages may also include a Default chart that looks like this:

Zone Function	Address	Default
1	0001	23
2	0002	24
3	0003	21

10.0 Programming

10.1 General Control Programing: Program Address (0000)

General Control programming defines the system-wide general operating parameters. **See Glossary (section 6.1) for further details.**

Data Digit 1 2

Select Options	Enter the Data Digit as a: 0	1	2	3	4	5	6	7	8	9	*0	*1	*2	*3	*4	*5
Allow Normal and Custom Arming**	●	●	●	●	●	●	●	●	●	●	●	●	●	●	●	●
Allow Perimeter Instant Arming**	●	●			●	●			●	●			●	●		
Allow Perimeter Arming**	●	●			●	●			●	●			●	●		
Allow Maximum Security Arming**	●	●			●	●			●	●			●	●		
Closing Ring-Back					●	●	●	●					●	●	●	●
Siren on Comm. Fail for Silent Zone									●	●	●	●	●	●	●	●
50 Hz. operationΔ		●		●		●		●		●		●		●		●
60 Hz. operation	●		●		●		●		●		●		●		●	

Δ = For installations in North America, select 60 Hz. operation.

*0 - *5 are Hex values. They will display as A - F at the keypads.

Select Options	Enter DD as a: 0	1	2	3	4	5	6	7	8
Restore zone when Sounders Silence	●			●			●		
Restore zone when Zone Restores		●			●			●	
Restore zone when System is Disarmed			●			●			●
Allow Swinger Shunts. Send Bypass Reports				●	●	●			
Allow Swinger Shunts. No Bypass Reports							●	●	●

**** =**

- Normal Arming = [PIN] + [On]: If programmed, Normal Arming arms the entire system while allowing entry delays for entry/exit zones.
- Perimeter Instant Arming = [PIN] + [No Entry] + [Perimeter Only]: If programmed, Perimeter Instant Arming arms only the perimeter of the system and does not allow entry delays for entry/exit zones.
- Perimeter Arming = [PIN] + [Perimeter Only]: If programmed, Perimeter Arming arms only the perimeter of the system while allowing entry delays for entry/exit zones.
- Custom Arming = [PIN] + [#] [4]: If programmed, Custom Arming allows custom arming of the system and bypasses the zone functions specified in data addresses 2725-2728.
- Maximum Security Arming = [PIN] + [No Entry] + [On]: If programmed, Maximum Security Arming arms the entire system and does not allow entry delays for entry/exit zones.

Programming a Zone

Programming a Zone is a <u>four step process</u>. These steps must be performed, <u>in order</u>, to program a zone.

- Step 1 is programming Zone Functions (what the zone will do in alarm),
- Step 2 is assigning a Zone Function to the zone.
- Step 3 is assigning a Zone Type to the zone.
- Step 4 is assigning the zone to a partition.

Step 1: Programming the Zone Functions

10.2 Zone Function Programming: Program Addresses (0001-0030)

A Zone Function is the description of how a zone will behave. Up to 30 different Zone Functions may be programmed. You may use the default values (which are already programmed into the panel) and skip this step, or change the defaults, or add new Zone Functions. **See section 6.2 for further details.**

Data Digit

1	2

Select Options	Enter the Data Digit as a: 0	1	2	3	4	5	6	7	*2	*3	*4	*5
Invisible Alarm	●				●				●			
Silent Alarm		●				●				●		
Steady Alarm Output			●				●				●	
Pulsing Alarm Output				●				●				●
Alarm on Short	●	●	●	●	●	●	●	●				
Alarm on Open	●	●	●	●					●	●	●	●
Trouble on Open**					●	●	●	●				
Trouble on Short									●	●	●	●

*2 - *5 are Hex values. They will display as C - F at the keypads.

** = Only when disarmed. When armed, this becomes Alarm on Open or Short for non-24-hour zones. **Note:** Multiplex contacts (DS7450 and DS7452) should not be programmed for Trouble on Open.

Select Option	DD
Interior Delayed	0
Perimeter Instant	1
24-Hour	2
Entry/Exit Delay #1	3
Entry/Exit Delay #2	4
Interior Entry/Exit Follower	5
Interior Home/Away	6
Interior Instant	7
Day Monitor	8
Keyswitch (See note below)	9
Fire Zone with verification	*0
Fire Zone w/out verification	*1
Waterflow	*2
Supervisory	*3
Entry/Exit Delay Cancel 1	*4
Entry/Exit Delay Cancel 2	*5

	9

Note: If digit 2 = 9 (keyswitch), use this chart for digit 1.

Select Option	DD
Single Partition-No Force Arm	0
Single Partition-Can Force Arm	1
All Partitions-No Force Arm	2
All Partitions-Can Force Arm	3

An open loop will always produce a steady alarm response.

Value (fill in)	Zone Funct.	Address	Default Values (Will be forced to different values when in Commercial Fire Mode. See section 10.18.3)
	1	0001	2 = Steady alarm output, alarm on short and open. 3 = Entry/exit delay 1.
	2	0002	2 = Steady alarm output, alarm on short and open. 4 = Entry/exit delay 2.
	3	0003	2 = Steady alarm output, alarm on short and open. 1 = Perimeter Instant.
	4	0004	2 = Steady alarm output, alarm on short and open. 5 = Interior entry/exit follower.
	5	0005	2 = Steady alarm output, alarm on short and open. 6 = Interior home/away.
	6	0006	2 = Steady alarm output, alarm on short and open. 7 = Interior Instant.
	7	0007	2 = Steady alarm output, alarm on short and open. 2 = 24-hour.
	8	0008	7 = Pulsing alarm output, alarm on short, trouble on open. *0 = Fire zone with verification.
	9	0009	2 = Steady alarm output, alarm on short and open. 1 = Perimeter Instant.
	10	0010	2 = Steady alarm output, alarm on short and open. 1 = Perimeter Instant.
	11	0011	2 = Steady alarm output, alarm on short and open. 1 = Perimeter Instant.
	12	0012	2 = Steady alarm output, alarm on short and open. 1 = Perimeter Instant.
	13	0013	2 = Steady alarm output, alarm on short and open. 1 = Perimeter Instant.
	14	0014	2 = Steady alarm output, alarm on short and open. 1 = Perimeter Instant.
	15	0015	2 = Steady alarm output, alarm on short and open. 1 = Perimeter Instant.
	16 to 30	0016 to 0030	2 = Steady alarm output, alarm on short and open. 1 = Perimeter Instant.

Step 2: Assigning a Zone Function to the Zone

In this step, a Zone function is assigned to the Zone.

10.3 Zone Programming: Program Addresses (0031-0278)

In Zone Programming, each zone is defined according to its input (single or multiple zone input, or a DS7465) and its Zone Function (1-30) or Output Function (1-24). The DS7465's relay is the only device that will follow the output functions; its input loop will follow a zone function. All single and multiple zone inputs will follow a zone function. **See section 6.3 for further details.**

Data Digit

1 **2**

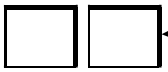

Options	Zone Function Value
Disable a zone	00
Enter a Zone Function Value	01-30

The DS7465 occupies two zones. The odd numbered zone of the zone pair is the input zone. The even numbered zone of the zone pair is the output relay. The output follows an output function.

Zone Number	Address	Zone Function Default
1	0031	01
2	0032	02
3	0033	03
4	0034	04
5	0035	05
6	0036	06
7	0037	07
8	0038	08
9-248	0039-0278	00

Hint: Address = Zone Number + 30

Step 3: Assigning a Zone Type to the Zone

10.4 Zone Programming: Zone Type Program Addresses (0415-0538)

In Zone Programming, each zone is defined according to its Input (single or multiple zone input, or a DS7465) and its Zone Function or Output function (1-24). The DS7465's relay is the only device that will follow the output functions; its input loop will follow a zone function. All single and multiple zone inputs will follow a zone function. **See section 6.3 for further details.**

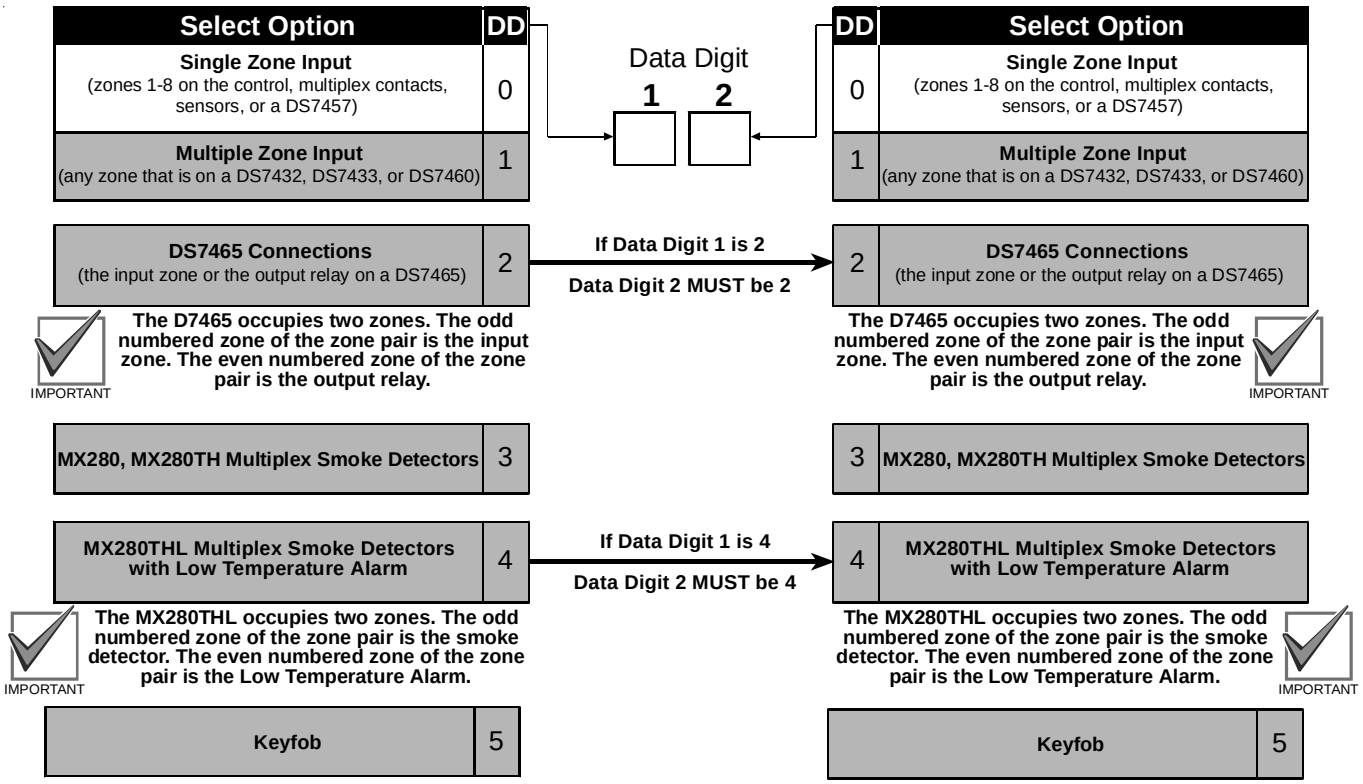

Zones	Address	Zones	Address	Zones	Address	Zones	Address
Zones 1 & 2	0415	Zones 65 & 66	0447	Zones 129 & 130	0479	Zones 193 & 194	0511
Zones 3 & 4	0416	Zones 67 & 68	0448	Zones 131 & 132	0480	Zones 195 & 196	0512
Zones 5 & 6	0417	Zones 69 & 70	0449	Zones 133 & 134	0481	Zones 197 & 198	0513
Zones 7 & 8	0418	Zones 71 & 72	0450	Zones 135 & 136	0482	Zones 199 & 200	0514
Zones 9 & 10	0419	Zones 73 & 74	0451	Zones 137 & 138	0483	Zones 201 & 202	0515
Zones 11 & 12	0420	Zones 75 & 76	0452	Zones 139 & 140	0484	Zones 203 & 204	0516
Zones 13 & 14	0421	Zones 77 & 78	0453	Zones 141 & 142	0485	Zones 205 & 206	0517
Zones 15 & 16	0422	Zones 79 & 80	0454	Zones 143 & 144	0486	Zones 207 & 208	0518
Zones 17 & 18	0423	Zones 81 & 82	0455	Zones 145 & 146	0487	Zones 209 & 210	0519
Zones 19 & 20	0424	Zones 83 & 84	0456	Zones 147& 148	0488	Zones 211 & 212	0520
Zones 21 & 22	0425	Zones 85 & 86	0457	Zones 149 & 150	0489	Zones 213 & 214	0521
Zones 23 & 24	0426	Zones 87 & 88	0458	Zones 151 & 152	0490	Zones 215 & 216	0522
Zones 25 & 26	0427	Zones 89 & 90	0459	Zones 153 & 154	0491	Zones 217 & 218	0523
Zones 27 & 28	0428	Zones 91 & 92	0460	Zones 155 & 156	0492	Zones 219 & 220	0524
Zones 29 & 30	0429	Zones 93 & 94	0461	Zones 157 & 158	0493	Zones 221 & 222	0525
Zones 31 & 32	0430	Zones 95 & 96	0462	Zones 159 & 160	0494	Zones 223 & 224	0526
Zones 33 & 34	0431	Zones 97 & 98	0463	Zones 161 & 162	0495	Zones 225 & 226	0527
Zones 35 & 36	0432	Zones 99 & 100	0464	Zones 163 & 164	0496	Zones 227 & 228	0528
Zones 37 & 38	0433	Zones 101 & 102	0465	Zones 165 & 166	0497	Zones 229 & 230	0529
Zones 39 & 40	0434	Zones 103 & 104	0466	Zones 167 & 168	0498	Zones 231 & 232	0530
Zones 41 & 42	0435	Zones 105 & 106	0467	Zones 169 & 170	0499	Zones 233 & 234	0531
Zones 43 & 44	0436	Zones 107 & 108	0468	Zones 171 & 172	0500	Zones 235 & 236	0532
Zones 45 & 46	0437	Zones 109 & 110	0469	Zones 173 & 174	0501	Zones 237 & 238	0533
Zones 47 & 48	0438	Zones 111 & 112	0470	Zones 175 & 176	0502	Zones 239 & 240	0534
Zones 49 & 50	0439	Zones 113 & 114	0471	Zones 177 & 178	0503	Zones 241 & 242	0535
Zones 51 & 52	0440	Zones 115 & 116	0472	Zones 179 & 180	0504	Zones 243 & 244	0536
Zones 53 & 54	0441	Zones 117 & 118	0473	Zones 181 & 182	0505	Zones 245 & 246	0537
Zones 55 & 56	0442	Zones 119 & 120	0474	Zones 183 & 184	0506	Zones 247 & 248	0538
Zones 57 & 58	0443	Zones 121 & 122	0475	Zones 185 & 186	0507		
Zones 59 & 60	0444	Zones 123 & 124	0476	Zones 187 & 188	0508		
Zones 61 & 62	0445	Zones 125 & 126	0477	Zones 189 & 190	0509		
Zones 63 & 64	0446	Zones 127 & 128	0478	Zones 191 & 192	0510		

When using premises RF,
- zones 129-136 are reserved.
- zones 137-248 are available as RF zones **only**! Wired zones can not reside in zones 137-248 when using RF.

Step 4: Assigning a Partition to the Zone

10.5 Zone Partition Assignment: Program Addresses (0287-0410)

In Zone Partition Assignment, each zone is assigned to a partition. By default, all zones are assigned to partition 1.

The partition assignment for odd numbered zones is programmed in the first data digit of these addresses. The partition assignment for even numbered zones is programmed in the second data digit of these addresses.

For example, to assign zone 1 to partition 1 and zone 2 to partition 2, program address 0287 as 01.

Zones	Address	Zones	Address	Zones	Address	Zones	Address
Zones 1 & 2	0287	Zones 65 & 66	0319	Zones 129 & 130	0351	Zones 193 & 194	0383
Zones 3 & 4	0288	Zones 67 & 68	0320	Zones 131 & 132	0352	Zones 195 & 196	0384
Zones 5 & 6	0289	Zones 69 & 70	0321	Zones 133 & 134	0353	Zones 197 & 198	0385
Zones 7 & 8	0290	Zones 71 & 72	0322	Zones 135 & 136	0354	Zones 199 & 200	0386
Zones 9 & 10	0291	Zones 73 & 74	0323	Zones 137 & 138	0355	Zones 201 & 202	0387
Zones 11 & 12	0292	Zones 75 & 76	0324	Zones 139 & 140	0356	Zones 203 & 204	0388
Zones 13 & 14	0293	Zones 77 & 78	0325	Zones 141 & 142	0357	Zones 205 & 206	0389
Zones 15 & 16	0294	Zones 79 & 80	0326	Zones 143 & 144	0358	Zones 207 & 208	0390
Zones 17 & 18	0295	Zones 81 & 82	0327	Zones 145 & 146	0359	Zones 209 & 210	0391
Zones 19 & 20	0296	Zones 83 & 84	0328	Zones 147& 148	0360	Zones 211 & 212	0392
Zones 21 & 22	0297	Zones 85 & 86	0329	Zones 149 & 150	0361	Zones 213 & 214	0393
Zones 23 & 24	0298	Zones 87 & 88	0330	Zones 151 & 152	0362	Zones 215 & 216	0394
Zones 25 & 26	0299	Zones 89 & 90	0331	Zones 153 & 154	0363	Zones 217 & 218	0395
Zones 27 & 28	0300	Zones 91 & 92	0332	Zones 155 & 156	0364	Zones 219 & 220	0396
Zones 29 & 30	0301	Zones 93 & 94	0333	Zones 157 & 158	0365	Zones 221 & 222	0397
Zones 31 & 32	0302	Zones 95 & 96	0334	Zones 159 & 160	0366	Zones 223 & 224	0398
Zones 33 & 34	0303	Zones 97 & 98	0335	Zones 161 & 162	0367	Zones 225 & 226	0399
Zones 35 & 36	0304	Zones 99 & 100	0336	Zones 163 & 164	0368	Zones 227 & 228	0400
Zones 37 & 38	0305	Zones 101 & 102	0337	Zones 165 & 166	0369	Zones 229 & 230	0401
Zones 39 & 40	0306	Zones 103 & 104	0338	Zones 167 & 168	0370	Zones 231 & 232	0402
Zones 41 & 42	0307	Zones 105 & 106	0339	Zones 169 & 170	0371	Zones 233 & 234	0403
Zones 43 & 44	0308	Zones 107 & 108	0340	Zones 171 & 172	0372	Zones 235 & 236	0404
Zones 45 & 46	0309	Zones 109 & 110	0341	Zones 173 & 174	0373	Zones 237 & 238	0405
Zones 47 & 48	0310	Zones 111 & 112	0342	Zones 175 & 176	0374	Zones 239 & 240	0406
Zones 49 & 50	0311	Zones 113 & 114	0343	Zones 177 & 178	0375	Zones 241 & 242	0407
Zones 51 & 52	0312	Zones 115 & 116	0344	Zones 179 & 180	0376	Zones 243 & 244	0408
Zones 53 & 54	0313	Zones 117 & 118	0345	Zones 181 & 182	0377	Zones 245 & 246	0409
Zones 55 & 56	0314	Zones 119 & 120	0346	Zones 183 & 184	0378	Zones 247 & 248	0410
Zones 57 & 58	0315	Zones 121 & 122	0347	Zones 185 & 186	0379		
Zones 59 & 60	0316	Zones 123 & 124	0348	Zones 187 & 188	0380		
Zones 61 & 62	0317	Zones 125 & 126	0349	Zones 189 & 190	0381		
Zones 63 & 64	0318	Zones 127 & 128	0350	Zones 191 & 192	0382		

Select Option	DD
Belongs to Partition 1	0
Belongs to Partition 2	1
Belongs to Partition 3	2
Belongs to Partition 4	3
Belongs to Partition 5	4
Belongs to Partition 6	5
Belongs to Partition 7	6
Belongs to Partition 8	7

Data Digit

1 = odd numbered zones

2 = even numbered zones

10.6 Zone Bypass Programming: Program Addresses (2721-2724)

Zone Bypass programming determines which zone functions can be bypassed. Zone functions that can not be bypassed can not be force armed either. Fire zones can never be manually bypassed, but can be force armed. The Default of [0] or [8] means those zones can be bypassed.

Note: This programming item does **not** affect Custom Arming Programming (PA 2725-2778) or Swinger Shunt Bypasses (**see programming for Program Address 0000**).

PA 2721
Data Digit
1 **2**

Select Options	Enter the Data Digit as a: **0**	1	2	3	4	5	6	7	8	9	*0	*1	*2	*3	*4	*5
Zone Function 1 Can Be Bypassed	●		●		●		●		●		●		●		●	
Zone Function 2 Can Be Bypassed	●	●			●	●			●	●			●	●		
Zone Function 3 Can Be Bypassed	●	●	●	●					●	●	●	●				
Zone Function 4 Can Be Bypassed	●	●	●	●	●	●	●	●								

*0 - *5 are Hex values. They will display as A - F at the keypads.

Select Options	Enter the Data Digit as a: 0	1	2	3	4	5	6	7	**8**	9	*0	*1	*2	*3	*4	*5
Zone Function 5 Can Be Bypassed	●		●		●		●		●		●		●		●	
Zone Function 6 Can Be Bypassed	●	●			●	●			●	●			●	●		
Zone Function 7 Can Be Bypassed	●	●	●	●					●	●	●	●				
Zone Function 8 Can Be Bypassed	●	●	●	●	●	●	●	●								

*0 - *5 are Hex values. They will display as A - F at the keypads.

PA 2722
Data Digit
1 **2**

Select Options	Enter the Data Digit as a: **0**	1	2	3	4	5	6	7	8	9	*0	*1	*2	*3	*4	*5
Zone Function 9 Can Be Bypassed	●		●		●		●		●		●		●		●	
Zone Function 10 Can Be Bypassed	●	●			●	●			●	●			●	●		
Zone Function 11 Can Be Bypassed	●	●	●	●					●	●	●	●				
Zone Function 12 Can Be Bypassed	●	●	●	●	●	●	●	●								

*0 - *5 are Hex values. They will display as A - F at the keypads.

Select Options	Enter the Data Digit as a: **0**	1	2	3	4	5	6	7	8	9	*0	*1	*2	*3	*4	*5
Zone Function 13 Can Be Bypassed	●		●		●		●		●		●		●		●	
Zone Function 14 Can Be Bypassed	●	●			●	●			●	●			●	●		
Zone Function 15 Can Be Bypassed	●	●	●	●					●	●	●	●				
Zone Function 16 Can Be Bypassed	●	●	●	●	●	●	●	●								

*0 - *5 are Hex values. They will display as A - F at the keypads.

PA 2723
Data Digit
1 **2**

Select Options	Enter the Data Digit as a: 0	1	2	3	4	5	6	7	8	9	*0	*1	*2	*3	*4	*5
Zone Function 17 Can Be Bypassed	●		●		●		●		●		●		●		●	
Zone Function 18 Can Be Bypassed	●	●			●	●			●	●			●	●		
Zone Function 19 Can Be Bypassed	●	●	●	●					●	●	●	●				
Zone Function 20 Can Be Bypassed	●	●	●	●	●	●	●	●								

*0 - *5 are Hex values. They will display as A - F at the keypads.

Select Options	Enter the Data Digit as a: 0	1	2	3	4	5	6	7	8	9	*0	*1	*2	*3	*4	*5
Zone Function 21 Can Be Bypassed	●		●		●		●		●		●		●		●	
Zone Function 22 Can Be Bypassed	●	●			●	●			●	●			●	●		
Zone Function 23 Can Be Bypassed	●	●	●	●					●	●	●	●				
Zone Function 24 Can Be Bypassed	●	●	●	●	●	●	●	●								

*0 - *5 are Hex values. They will display as A - F at the keypads.

PA 2724
Data Digit
1 **2**

Select Options	Enter the Data Digit as a: 0	1	2	3	4	5	6	7	8	9	*0	*1	*2	*3	*4	*5
Zone Function 25 Can Be Bypassed	●		●		●		●		●		●		●		●	
Zone Function 26 Can Be Bypassed	●	●			●	●			●	●			●	●		
Zone Function 27 Can Be Bypassed	●	●	●	●					●	●	●	●				
Zone Function 28 Can Be Bypassed	●	●	●	●	●	●	●	●								

*0 - *5 are Hex values. They will display as A - F at the keypads.

Select Options	Enter the Data Digit as a: 0	1	2	3	4	5	6	7	8	9	*0	*1	*2	*3	*4	*5
Zone Function 29 Can Be Bypassed	●		●													
Zone Function 30 Can Be Bypassed	●	●														

*0 - *5 are Hex values. They will display as A - F at the keypads.

10.7 Output Programming: Program Addresses (2734, 2735, 2736)

Output programming defines the event, partition, and type of alarm (burglary or fire) that will trigger each of the three physical outputs on the control panel.

See section 3.0 for the location of the physical outputs on the control panel.
See Glossary (section 6.4) for further details.

Programmable Output 1 will be ON for 10 seconds after pressing [System Reset].

Programmable Output 2 will be OFF for 10 seconds after pressing [System Reset].

Select Option	DD
Latch on ANY Zone Alarm**	0
ON during Entry Pre-Alert/Exit Warning	1
ON for 10 sec. after pressing [System Reset]	2
ON when system is Armed	3
Ground Start	4
System Status (ready to arm)	5
Zone Alarm	6
Zone Alarm delayed by 20 sec.	7
Keypad Sounder Output	8
Access Output (10 sec. pulse)	9
Keyfob	*0
Panic Duress Output***	*1
On during battery test	*3

Data Digit

1 2

Options	DD
Disabled	0
Burglar Alarm	1
Fire Alarm	2
Burg and Fire Alarm	3

3

Options	DD
Disabled	0
Armed Full	1
Armed Partial	2
Armed Any	3

Data Digit

1 2

*0

Options	RF3334	DD
Disabled		0
Momentary	Option Key	1
Toggle	Option Key	2
Momentary	Auxillary Key	3
Toggle	Auxillary Key	4

** = This includes invisible zones. See glossary for further details.
*** = See section 6.4 for description of this option.

Output	Address	Default
Alarm	2734	6 3
Programmable Output 1	2735	3 3
Programmable Output 2	2736	2 3

10.8 Output Partition Assignment: Program Addresses (2737-2738)

In Output Partition Assignment, each On-board output is assigned to a partition. By default, outputs are assigned to all partitions.

Output	Address	Default
Alarm	2737-DD1	8
Programmable Output 1	2737-DD2	8
Programmable Output 2	2738-DD1	8

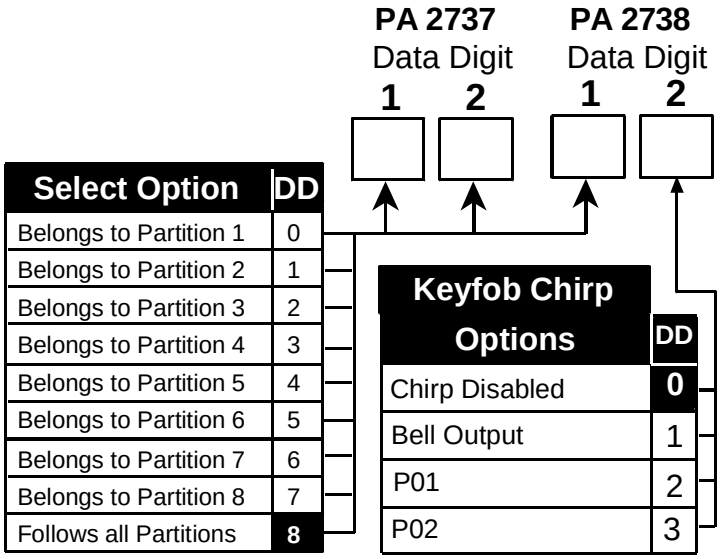

10.9 Partition Control Programming: Program Address (3420)

Partition Control programming defines the number of partitions in use and the common area (common area can only be partition 1). **See Glossary (section 6.5) for further details.**

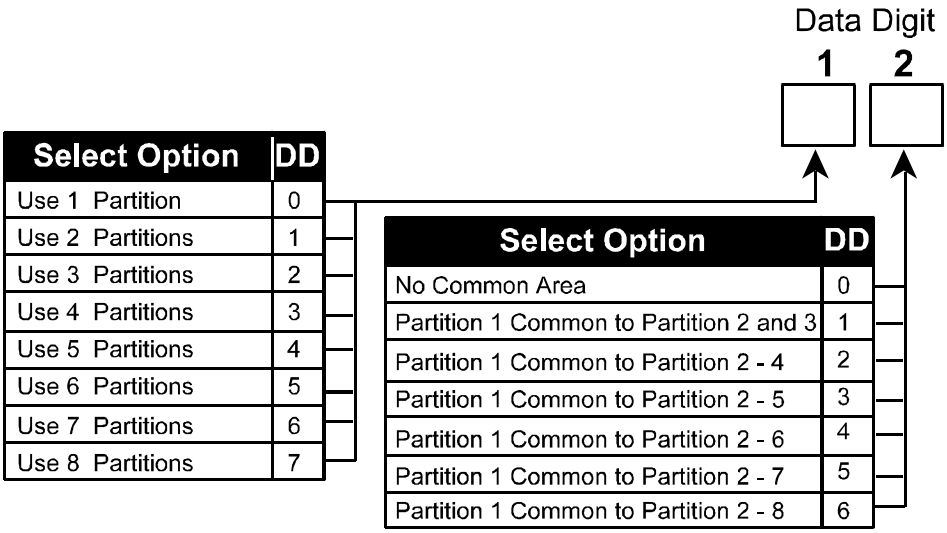

10.10 Quick Arm Control Programming: Program Address (3477)

Quick Arm Control programming defines which partitions can be quick armed (armed without requiring a PIN to be entered).

Data Digit

1	2

Select Options	Enter the Data Digit as a:															
	0	1	2	3	4	5	6	7	8	9	*0	*1	*2	*3	*4	*5
Partition 1 Quick Arm Enabled		●		●		●		●		●		●		●		●
Partition 2 Quick Arm Enabled			●	●			●	●			●	●			●	●
Partition 3 Quick Arm Enabled					●	●	●	●					●	●	●	●
Partition 4 Quick Arm Enabled									●	●	●	●	●	●	●	●

Select Options	Enter the Data Digit as a:															
	0	1	2	3	4	5	6	7	8	9	*0	*1	*2	*3	*4	*5
Partition 5 Quick Arm Enabled		●		●		●		●		●		●		●		●
Partition 6 Quick Arm Enabled			●	●			●	●			●	●			●	●
Partition 7 Quick Arm Enabled					●	●	●	●					●	●	●	●
Partition 8 Quick Arm Enabled									●	●	●	●	●	●	●	●

10.11 Keypad Assignment Programming: Program Addresses (3131-3138)

Keypad Assignment Programming is where you assign the keypad type and the partition to which it belongs.
See Glossary (section 6.6) for further details.

NOTE Each keypad must have its own Bus address. This must also be selected on the keypad via its address pins. See *DS7445/ DS7447 Installation Guide* (P/N: 22235). One keypad must be selected as keypad 1.

Defaults: The default, if using only one keypad, is an Alpha keypad belonging to partition one.

Program Address 3131		Program Address 3132		Program Address 3133		Program Address 3134	
Data Digit 1	Data Digit 2	Data Digit 1	Data Digit 2	Data Digit 1	Data Digit 2	Data Digit 1	Data Digit 2
Keypad 1* default = 1	Keypad 2 default = 0	Keypad 3 default = 0	Keypad 4 default = 0	Keypad 5 default = 0	Keypad 6 default = 0	Keypad 7 default = 0	Keypad 8 default = 0

Program Address 3135		Program Address 3136		Program Address 3137		Program Address 3138	
Data Digit 1	Data Digit 2	Data Digit 1	Data Digit 2	Data Digit 1	Data Digit 2	Data Digit 1	Data Digit 2
Keypad 9 default = 0	Keypad 10 default = 0	Keypad 11** default = 0	Keypad 12** default = 0	Keypad 13** default = 0	Keypad 14** default = 0	Keypad 15** default = 0	

* = When in Commercial Fire Mode, certain keypads must have specific assignments (see section 6.11).
** = Keypads 11-15 are connected to the Option Bus. If the DS7412 is connected to the Option Bus (at keypad address 13 or 14), keypad 13 or 14 is unavailable. Similarly, if the DS7420i is connected to the Option Bus at keypad address 15, keypad 15 is unavailable; and if the DS7488 is connected to the Option Bus at keypad address 11-15, the corresponding keypad(s) is (are) unavailable.

Select Options	0	1	2	3
Disabled	●			
Alpha (LCD) Keypad		●		●
LED Keypad			●	
Master Keypad***				●

Data Digit
1 2

Select Options	0	1
LCD Backlight Always On	●	
LCD Backlight Off Until Keypress		●

Backlight selection affects all LCD keypads

***** = If only using one partition, do not program keypads as Master Keypads.**
Only program for a Master Keypad if you need to view multiple partitions from a single keypad.

10.12 Keypad Partition Assignment: Program Addresses (3139-3146)

Program Address 3139		Program Address 3140		Program Address 3141		Program Address 3142	
Data Digit 1	Data Digit 2	Data Digit 1	Data Digit 2	Data Digit 1	Data Digit 2	Data Digit 1	Data Digit 2
Keypad 1	Keypad 2	Keypad 3	Keypad 4	Keypad 5	Keypad 6	Keypad 7	Keypad 8

Program Address 3143		Program Address 3144		Program Address 3145		Program Address 3146	
Data Digit 1	Data Digit 2	Data Digit 1	Data Digit 2	Data Digit 1	Data Digit 2	Data Digit 1	Data Digit 2
Keypad 9	Keypad 10	Keypad 11	Keypad 12	Keypad 13	Keypad 14	Keypad 15	0 Must Be 0

Select Option	DD
Belongs to Partition 1	0
Belongs to Partition 2	1
Belongs to Partition 3	2
Belongs to Partition 4	3
Belongs to Partition 5	4
Belongs to Partition 6	5
Belongs to Partition 7	6
Belongs to Partition 8	7

10.13 Emergency Key Programming: Program Addresses (3147-3148)

Emergency Key and Panic Key programming disables or activates these keys (the A, B, and C keys) located on the keypads and/or keyfobs.
It also determines a silent, pulsed, or steady alarm.
See Glossary (section 6.7) for further details.

PA 3147

Data Digit

1 2

Fire Key

A

Select Option	DD
Fire Key Disabled	0
Fire Key = Disabled	1
Fire Key = Steady Alarm	2
Fire Key = Pulsed Alarm	3

May be forced to a different value when in Commercial Fire Mode. See section 10.16.3.

Emergency Key

B

Select Option	DD
Special Emergency Key Disabled	0
Special Emergency Key = Silent Alarm	1
Special Emergency Key = Steady Alarm	2
Special Emergency Key = Pulsed Alarm	3

PA 3148

Data Digit

1 2

0

Panic Key

C

Select Option	DD
Panic Key Disabled	0
Panic Key = Silent Alarm	1
Panic Key = Steady Alarm	2
Panic Key = Pulsed Alarm	3

Data Digit 2 must be 0 **0**

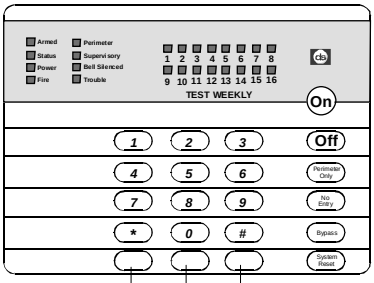

May be forced to a different value when in Commercial Fire Mode. See section 10.16.3.

10.14 Custom Arming Programming: Program Addresses (2725-2728)

See Glossary (section 6.8) for further details.

PA 2725

Data Digit

1 2

Select Options	Enter the Data Digit as a: 0	1	2	3	4	5	6	7	8	9	*0	*1	*2	*3	*4	*5
Bypass Zone Function 1		●		●		●		●		●		●		●		●
Bypass Zone Function 2			●	●			●	●			●	●			●	●
Bypass Zone Function 3					●	●	●	●					●	●	●	●
Bypass Zone Function 4									●	●	●	●	●	●	●	●

*0 - *5 are Hex values. They will display as A - F at the keypads.

Select Options	Enter the Data Digit as a: 0	1	2	3	4	5	6	7	8	9	*0	*1	*2	*3	*4	*5
Bypass Zone Function 5		●		●		●		●		●		●		●		●
Bypass Zone Function 6			●	●			●	●			●	●			●	●
Bypass Zone Function 7					●	●	●	●					●	●	●	●
Bypass Zone Function 8									●	●	●	●	●	●	●	●

*0 - *5 are Hex values. They will display as A - F at the keypads.

10.14 Custom Arming Programming: Program Addresses (2725-2728) (Continued)

PA 2726
Data Digit
1 2

Select Options	Enter the Data Digit as a: 0	1	2	3	4	5	6	7	8	9	*0	*1	*2	*3	*4	*5
Bypass Zone Function 9		●		●		●		●		●		●		●		●
Bypass Zone Function 10			●	●			●	●			●	●			●	●
Bypass Zone Function 11					●	●	●	●					●	●	●	●
Bypass Zone Function 12									●	●	●	●	●	●	●	●

*0 - *5 are Hex values. They will display as A - F at the keypads.

Select Options	Enter the Data Digit as a: 0	1	2	3	4	5	6	7	8	9	*0	*1	*2	*3	*4	*5
Bypass Zone Function 13		●		●		●		●		●		●		●		●
Bypass Zone Function 14			●	●			●	●			●	●			●	●
Bypass Zone Function 15					●	●	●	●					●	●	●	●
Bypass Zone Function 16									●	●	●	●	●	●	●	●

*0 - *5 are Hex values. They will display as A - F at the keypads.

PA 2727
Data Digit
1 2

Select Options	Enter the Data Digit as a: 0	1	2	3	4	5	6	7	8	9	*0	*1	*2	*3	*4	*5
Bypass Zone Function 17		●		●		●		●		●		●		●		●
Bypass Zone Function 18			●	●			●	●			●	●			●	●
Bypass Zone Function 19					●	●	●	●					●	●	●	●
Bypass Zone Function 20									●	●	●	●	●	●	●	●

*0 - *5 are Hex values. They will display as A - F at the keypads.

Select Options	Enter the Data Digit as a: 0	1	2	3	4	5	6	7	8	9	*0	*1	*2	*3	*4	*5
Bypass Zone Function 21		●		●		●		●		●		●		●		●
Bypass Zone Function 22			●	●			●	●			●	●			●	●
Bypass Zone Function 23					●	●	●	●					●	●	●	●
Bypass Zone Function 24									●	●	●	●	●	●	●	●

*0 - *5 are Hex values. They will display as A - F at the keypads.

PA 2728
Data Digit
1 2

Select Options	Enter the Data Digit as a: 0	1	2	3	4	5	6	7	8	9	*0	*1	*2	*3	*4	*5
Bypass Zone Function 25		●		●		●		●		●		●		●		●
Bypass Zone Function 26			●	●			●	●			●	●			●	●
Bypass Zone Function 27					●	●	●	●					●	●	●	●
Bypass Zone Function 28									●	●	●	●	●	●	●	●

*0 - *5 are Hex values. They will display as A - F at the keypads.

Select Options	Enter the Data Digit as a: 0	1	2	3
Bypass Zone Function 29		●		●
Bypass Zone Function 30			●	●

10.15 Force Arming and Ground Fault Detect Programming: Program Address (2732)

Force Arming programming defines how many zones may be Force Armed using an Arming sequence followed by the [Bypass] key. With this entry, all violated zones (up the programmed limit) will automatically be Force Armed (bypassed). Ground Fault Detect programming determines whether or not the control will detect a ground fault condition.
See Glossary (sections 6.9 and 6.10) for further details.

Select Option	DD
Do not allow Force Arming	0
Allow up to 1 zone to be Force Armed	1
Allow up to 2 zones to be Force Armed	2
Allow up to 3 zones to be Force Armed	3
Allow up to 4 zones to be Force Armed	4
Allow up to 5 zones to be Force Armed	5
Allow up to 6 zones to be Force Armed	6
Allow up to 7 zones to be Force Armed	7
Allow up to 8 zones to be Force Armed	8
Allow up to 9 zones to be Force Armed	9

Data Digit
1 2

Note: This limit does **not** apply when arming with a keyswitch programmed with force arming enabled.

Select Option	DD
Ground Fault Detect Off	0
Ground Fault Detect On	1

10.16 Commercial Fire Mode Programming: Program Address (2733)

This section describes how to define the parameters for the Commercial Fire Mode.
See Glossary (section 6.11) for further details.

Data Digit 1 2

Select Options	Enter the Data Digit as a: 0	1	2	3	4	5	6	7	8	9	*0	*1	*2
Commercial Fire Mode disabled	●												
Local Comm. Fire Mode enabled		●	●	●	●	●	●						
Central Station Comm. Fire Mode enabled								●	●	●	●	●	●
10 sec. delay on waterflow zone			●						●				
20 sec. delay on waterflow zone				●						●			
30 sec. delay on waterflow zone					●						●		
40 sec. delay on waterflow zone						●						●	
50 sec. delay on waterflow zone							●						●

*0 - *2 are Hex values. They will display as A - C at the keypads.

Zones 1-4 may only have waterflow delays.

Select Options	Enter the DD as a: 0	1	2	3	4	5
Bell and Aux. activate on Fire	●	●	●	●	●	●
Bell and Aux. activate on Burg				●	●	●
Pulsing Fire Alarms are 1 sec. On / 1 sec. Off	●			●		
Pulsing Fire Alarms use California March Time		●			●	
Pulsing Fire Alarms use Temporal Cadence			●			●

When programming Fire zones, it is recommended that they be zone functions 12 and 13 (**see sections 10.2, 10.4 and 10.16.3**).

10.16.1 When Central Station Commercial Fire Mode is chosen, address 4021 (DS7420i: Dual Phone Line/Bell Supervision Module Output Programming), will be forced to a value of 5.

10.16.2 When Local Commercial Fire Mode is chosen, address 4021 (DS7420i: Dual Phone Line/Bell Supervision Module Output Programming),will be forced to a value of 3, 4, or 5. (Turns the Bell Monitor feature ON and the Alarm Output on Line Fault feature OFF)

10.16.3 Regardless of which Commercial Fire Mode is chosen, the following parameters will be forced when exiting local programmer's mode:

- Zone Function 12, address 0012, will be a 7 *0. (Alarm on Short, Trouble on Open, Pulsing Fire with verification)
- Zone Function 13, address 0013, will be a 7 *1. (Alarm on Short, Trouble on Open, Pulsing Fire without verification)
- Zone Function 14, address 0014, will be a 7 *2. (Alarm on Short, Trouble on Open, Pulsing Water Flow)
- Zone Function 15, address 0015, will be a 7 *3. (Alarm on Short, Trouble on Open, Pulsing Supervisory)
- Zone Bypass address 2722 will not allow zone functions 12 - 15 to be bypassed.
- Emergency Key, address 3147, data digit 1, will become a 3 if programmed previously as a 2. Data digit 2 will become a 2 if programmed previously as a 3.
- Panic Key, address 3148, data digit 1, will become a 2 if programmed previously as a 3.
- Fire Bell Cutoff, address 4032: If less than 5, set to 5, otherwise untouched.
- The AC Fail Report delay will be random between 6-12 hours regardless of the delay time programmed in 4034. Also, the AC Fail Report will not be sent as a "tag-along."

10.16.4 In Central Station Commercial Fire Mode, the following communication parameters will be forced:
Report Codes: If 0, the following defaults will be set, otherwise they will be unchanged.

Address	Default	Address	Default	Address	Default	Address	Default	Address	Default
3207	*0 1	3223	*0 6	3336	6 9	3337	7 9	3342	6 *5
3208	7 1	3252	7 3	3282	6 3	3338	6 *0	3345	3 9
3220	*0 3	3253	7 4	3283	6 4	3339	7 *0	3346	3 *0
3221	*0 4	3254	7 5	3284	6 5	3340	8 3	3347	3 9
3222	*0 5	3255	7 6	3285	6 6	3341	7 *5		

- Phone Control (address 3156): If 0, set to 6 1, 4/2 @ 18/23, 10pps, otherwise untouched.
- Test Report (address 4026): Set to 8, call out every day.

10.17 Open/Close Report Control Programming: Program Address (3149)

See Glossary (section 6.12) for further details.

Select Options	Enter the Data Digit as a: 0	1	2	3	4	5	6	7	8	9
Do not report opens or closes	●									
Report opens and closes in Partition 1		●	●	●	●	●	●	●	●	
Report opens and closes in Partition 2			●	●	●	●	●	●	●	
Report opens and closes in Partition 3				●	●	●	●	●	●	
Report opens and closes in Partition 4					●	●	●	●	●	
Report opens and closes in Partition 5						●	●	●	●	
Report opens and closes in Partition 6							●	●	●	
Report opens and closes in Partition 7								●	●	
Report opens and closes in Partition 8									●	
Report first Partition to open and last Partition to close**										●

** = When using this option, all partitions should have the same account code.

Data Digit

1	2

Send Closing and Bypass reports at close	**0**
Send Closing and Bypass reports after exit delay	1

Data Digit

1	2
	0

10.18 Open/Close & Zone Report Control Programming: Program Address (3151)

This section allows you to decide which phone number will send open and close reports, zone alarm, zone restoral, and zone trouble reports.

Select Option	DD
Alternate between both Phone Numbers	**0**
Report to Phone Number 1	1
Report to Phone Number 2	2
Report to Phone Number 1 and 2	3

Data Digit

1	2

Data Digit 1 is for Open and Close Reports.

Data Digit 2 is for Zone Alarm, Zone Restoral, Zone Trouble, Bypass, Unbypass, and Trouble Restoral Reports

Select Option	DD
Alternate between both Phone Numbers	**0**
Report to Phone Number 1	1
Report to Phone Number 2	2
Report to Phone Number 1 and 2	3

10.19 Report Control Programming: Program Address (3152)

This section allows you to decide which phone number will send reports other than open/close reports and zone reports.

Select Option	DD
Alternate between both Phone Numbers	**0**
Report to Phone Number 1	1
Report to Phone Number 2	2
Report to Phone Number 1 and 2	3

Data Digit

1	2

NOTE: Data Digit 1 does **not** include Open and Close Reports or Zone Reports (**see sections 10.17 and 10.18**).

0 Data Digit 2 must be 0

10.20 Timer Programming: Program Addresses (4028-4030, 4032-4033)

Entry and Exit Delay Timers are in 5 second intervals (the maximum delay time is 255 seconds).

For example:
5 sec. = 01
15 sec. = 03
20 sec. = 04
30 sec. = 06
45 sec. = 09
60 sec. = 12
255 sec. = 51

Data Digit 1 2

Exit Delay Time	
Address 4030	
0 to 51 (0 to 255 sec.*)	Default = 12 (60 sec.)

*5 second intervals

Data Digit 1 2

Entry Delay Time 1	
Address 4028	
0 to 51 (0 to 255 sec.*)	Default = 09 (45 sec.)

*5 second intervals

May be forced to a different value when in Commercial Fire Mode. **See section 10.18.3**.

Data Digit 1 2

Fire Bell Cutoff	
Address 4032	
0 to 99 minutes*	Default = 04 minutes

*1 minute intervals; 99 = 30 second cutoff

Data Digit 1 2

Entry Delay Time 2	
Address 4029	
0 to 51 (0 to 255 sec.*)	Default = 09 (45 sec.)

*5 second intervals

Data Digit 1 2

Burglary Bell Cutoff	
Address 4033	
0 to 99 minutes*	Default = 04 minutes

*1 minute intervals; 99 = 30 second cutoff

10.21 AC Fail Report Delay Programming: Program Address (4034)

The AC Fail Delay Times are programmed as Hexadecimal values.

For example:
00 = Send only with next report
1 *4 = 30 minute delay
3 *2 = 60 minute delay
78 = 120 minute delay
*5 0 = 240 minute delay
*5 *5 = Random delay (at least 15 minutes, but less than 120 minutes)

(*0 - *5 are Hex values. They will display as A through F at the keypads.)

See Glossary (section 6.13) for further details.

Data Digit 1 2

AC Fail Report Delay	
Address 4034	
00 through FF	Default = 00

10.22 General Authority Programming: Program Address (3421-3424)

This allows for a user with a General Authority level to Arm, Disarm and Bypass specified zones.
See Glossary (section 6.1) for further details.

Select Option	DD
General Code can Arm, Disarm, and Bypass	0
General Code can Arm and Bypass	1
General Code can Arm and Disarm	2
General Code can Arm	3

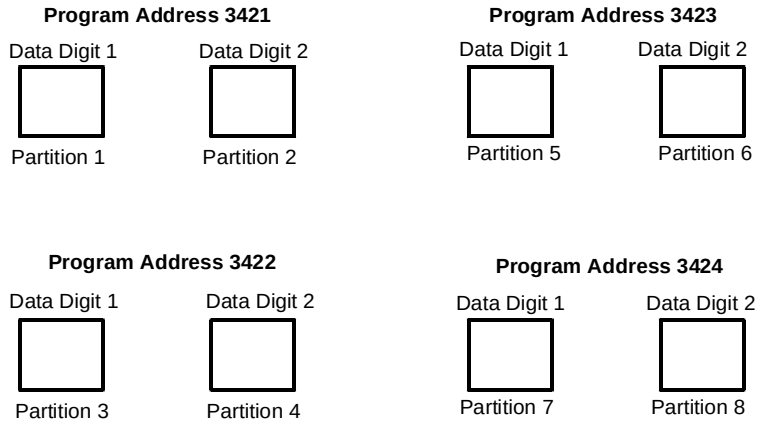

10.23 Arming Warning Programming: Program Addresses (3425-3428)

Arming Warning programming defines whether the keypad will be audible during the exit delay and auto arm period. If programmed, the keypad sounder will activate once every 5 seconds during the exit delay. At 10 seconds and 5 seconds remaining, the keypad sounder will activate 3 times. During auto arming, a pre-arming period will begin 15 minutes before the system arms automatically. The keypad sounders will pulse five times every minute. During the last five minutes before arming, these sounders will be on steady.

PA 3425

Data Digit 1 2

Partition 1	DD
No Keypad Sounder during Exit Delay	0
Keypad Sounder during Exit Delay	4

Partition 2	DD
No Keypad Sounder during Exit Delay	0
Keypad Sounder during Exit Delay	4

PA 3427

Data Digit 1 2

Partition 5	DD
No Keypad Sounder during Exit Delay	0
Keypad Sounder during Exit Delay	4

Partition 6	DD
No Keypad Sounder during Exit Delay	0
Keypad Sounder during Exit Delay	4

PA 3426

Data Digit 1 2

Partition 3	DD
No Keypad Sounder during Exit Delay	0
Keypad Sounder during Exit Delay	4

Partition 4	DD
No Keypad Sounder during Exit Delay	0
Keypad Sounder during Exit Delay	4

PA 3428

Data Digit 1 2

Partition 7	DD
No Keypad Sounder during Exit Delay	0
Keypad Sounder during Exit Delay	4

Partition 8	DD
No Keypad Sounder during Exit Delay	0
Keypad Sounder during Exit Delay	4

10.24 DS7412 RS232 Interface Control Programming: Program Address (4019)

DS7412 RS232 Interface Control Programming allows you to enable or disable the DS7412 and to select which history events are sent to the printer as they occur. Selecting "No Events" will cause the history to be printed only on command.

To print the History Buffer starting from the most recent event, enter the Master Code followed by [#] [0] [8]. To stop printing, enter Master Code [#] [0] [8] again.

Select Option	DD
DS7412 Disabled	0
DS7412 Enabled	1

Data Digit

1	2

Select Options	Enter the Data Digit as a: 0	1	2	3	4	5	6	7
No Events	●							
Alarms, Troubles, and Restorals		●		●		●		●
Opens and Closes			●	●			●	●
All Other Events					●	●	●	●

10.25 DS7412 RS232 Interface Configuration Programming: Program Address (4020)

DS7412 RS232 Interface Configuration Programming allows you to configure the DS7412 for your printer. Most printers will operate using the default values for the DS7412. Some printers may operate more efficiently using optional program values.

Consult the operating guide provided with your printer to be sure that its configuration matches the one programmed here.

NOTE: If using the WDSRP Direct Connection option for programming, Address 4019 must be set for 1 0. Address 4020 must be set for 2 5.

Data Digit

1	2

Select Option	DD
300 Baud	0
1200 Baud	1
2400 Baud	2
4800 Baud	3
9600 Baud	4
14400 Baud	5

Select Options	Enter the Data Digit as a: 0	1	2	3	4	5	6	7
No Parity	●	●	●	●				
ODD Parity					●	●		
EVEN Parity							●	●
Software Flow Control	●		●		●		●	
Hardware Flow Control		●		●		●		●
1 Stop Bit	●	●			●	●	●	●
2 Stop Bits			●	●				
8 Data Bits	●	●	●	●	●	●	●	●

10.26 RS232 Carriage Return/Line Feed Control: Program Address (4027)

The RS232 Carriage Return/Line Feed (CR/LF) Control allows you to choose between sending carriage returns/line feeds or spaces to the DS7412 module. This is only used when Program Address 4019 Data Digit #2 is programmed with the numbers 1 through 7.

Select Option	DD
Send CR/LF	0
Send Spaces	1

Data Digit

1	2
	0

10.27 Report Programming: Program Addresses (3207-3419)

- To send the User number along with open, close, or partial close reports: place an 'F' (*5) in the extended digit.
- To disable a report (meaning that nothing will be sent), place a '0' in the reporting digit.
- When using SIA or Contact ID format, place a '1' in the reporting digit of each report you wish to enable. It is not necessary to program the extended digit.
- For suggested values for 4/2, BFSK and Pager format, see section 12.1-12.3. For SIA and Contact ID, the values sent are listed in sections 13.1 and 13.2. For other formats, consult your central station.
- **HEX values:** Some Data Digit values are higher than 9. These values are programmed by pressing the [*] key followed by another number. These values will display as HEX characters when entered. The HEX character values are as follows:

***0 = A *1 = B *2 = C *3 = D *4 = E *5 = F**

See Glossary (section 6.13) for further details.

Report	Address	Default	Reporting Digit 1	Extended Digit 2
Keypad Fire Alarm	3207	00		
Keypad Fire Restoral	3208	00		
Zone Funct. 1 Alarm	3209	10		
Zone Funct. 2 Alarm	3210	20		
Zone Funct. 3 Alarm	3211	30		
Zone Funct. 4 Alarm	3212	40		
Zone Funct. 5 Alarm	3213	50		
Zone Funct. 6 Alarm	3214	60		
Zone Funct. 7 Alarm	3215	70		
Zone Funct. 8 Alarm	3216	80		
Zone Funct. 9 Alarm	3217	00		
Zone Funct. 10 Alarm	3218	00		
Zone Funct. 11 Alarm	3219	00		
Zone Funct. 12 Alarm	3220	00		
Zone Funct. 13 Alarm	3221	00		
Zone Funct. 14 Alarm	3222	00		
Zone Funct. 15 Alarm	3223	00		
Zone Funct. 16 Alarm	3224	00		
Zone Funct. 17 Alarm	3225	00		
Zone Funct. 18 Alarm	3226	00		
Zone Funct. 19 Alarm	3227	00		
Zone Funct. 20 Alarm	3228	00		
Zone Funct. 21 Alarm	3229	00		
Zone Funct. 22 Alarm	3230	00		
Zone Funct. 23 Alarm	3231	00		
Zone Funct. 24 Alarm	3232	00		
Zone Funct. 25 Alarm	3233	00		
Zone Funct. 26 Alarm	3234	00		
Zone Funct. 27 Alarm	3235	00		
Zone Funct. 28 Alarm	3236	00		
Zone Funct. 29 Alarm	3237	00		
Zone Funct. 30 Alarm	3238	00		
Keypad Emergency	3239	00		
Keypad Panic	3240	00		
Zone Funct. 1 Restoral	3241	00		
Zone Funct. 2 Restoral	3242	00		
Zone Funct. 3 Restoral	3243	00		
Zone Funct. 4 Restoral	3244	00		
Zone Funct. 5 Restoral	3245	00		
Zone Funct. 6 Restoral	3246	00		

Report	Address	Default	Reporting Digit 1	Extended Digit 2
Zone Funct. 7 Restoral	3247	00		
Zone Funct. 8 Restoral	3248	00		
Zone Funct. 9 Restoral	3249	00		
Zone Funct. 10 Restoral	3250	00		
Zone Funct. 11 Restoral	3251	00		
Zone Funct. 12 Restoral	3252	00		
Zone Funct. 13 Restoral	3253	00		
Zone Funct. 14 Restoral	3254	00		
Zone Funct. 15 Restoral	3255	00		
Zone Funct. 16 Restoral	3256	00		
Zone Funct. 17 Restoral	3257	00		
Zone Funct. 18 Restoral	3258	00		
Zone Funct. 19 Restoral	3259	00		
Zone Funct. 20 Restoral	3260	00		
Zone Funct. 21 Restoral	3261	00		
Zone Funct. 22 Restoral	3262	00		
Zone Funct. 23 Restoral	3263	00		
Zone Funct. 24 Restoral	3264	00		
Zone Funct. 25 Restoral	3265	00		
Zone Funct. 26 Restoral	3266	00		
Zone Funct. 27 Restoral	3267	00		
Zone Funct. 28 Restoral	3268	00		
Zone Funct. 29 Restoral	3269	00		
Zone Funct. 30 Restoral	3270	00		
Zone Funct. 1 Trouble	3271	00		
Zone Funct. 2 Trouble	3272	00		
Zone Funct. 3 Trouble	3273	00		
Zone Funct. 4 Trouble	3274	00		
Zone Funct. 5 Trouble	3275	00		
Zone Funct. 6 Trouble	3276	00		
Zone Funct. 7 Trouble	3277	00		
Zone Funct. 8 Trouble	3278	00		
Zone Funct. 9 Trouble	3279	00		
Zone Funct. 10 Trouble	3280	00		
Zone Funct. 11 Trouble	3281	00		
Zone Funct. 12 Trouble	3282	00		
Zone Funct. 13 Trouble	3283	00		
Zone Funct. 14 Trouble	3284	00		
Zone Funct. 15 Trouble	3285	00		
Zone Funct. 16 Trouble	3286	00		

Report Programming (Continued)

Report	Address	Default	Reporting Digit 1	Extended Digit 2
Zone Funct. 17 Trouble	3287	00		
Zone Funct. 18 Trouble	3288	00		
Zone Funct. 19 Trouble	3289	00		
Zone Funct. 20 Trouble	3290	00		
Zone Funct. 21 Trouble	3291	00		
Zone Funct. 22 Trouble	3292	00		
Zone Funct. 23 Trouble	3293	00		
Zone Funct. 24 Trouble	3294	00		
Zone Funct. 25 Trouble	3295	00		
Zone Funct. 26 Trouble	3296	00		
Zone Funct. 27 Trouble	3297	00		
Zone Funct. 28 Trouble	3298	00		
Zone Funct. 29 Trouble	3299	00		
Zone Funct. 30 Trouble	3300	00		
Zone Funct. 1 Trouble Restoral	3301	00		
Zone Funct. 2 Trouble Restoral	3302	00		
Zone Funct. 3 Trouble Restoral	3303	00		
Zone Funct. 4 Trouble Restoral	3304	00		
Zone Funct. 5 Trouble Restoral	3305	00		
Zone Funct. 6 Trouble Restoral	3306	00		
Zone Funct. 7 Trouble Restoral	3307	00		
Zone Funct. 8 Trouble Restoral	3308	00		
Zone Funct. 9 Trouble Restoral	3309	00		
Zone Funct. 10 Trouble Restoral	3310	00		
Zone Funct. 11 Trouble Restoral	3311	00		
Zone Funct. 12 Trouble Restoral	3312	00		
Zone Funct. 13 Trouble Restoral	3313	00		
Zone Funct. 14 Trouble Restoral	3314	00		
Zone Funct. 15 Trouble Restoral	3315	00		
Zone Funct. 16 Trouble Restoral	3316	00		
Zone Funct. 17 Trouble Restoral	3317	00		
Zone Funct. 18 Trouble Restoral	3318	00		
Zone Funct. 19 Trouble Restoral	3319	00		
Zone Funct. 20 Trouble Restoral	3320	00		
Zone Funct. 21 Trouble Restoral	3321	00		
Zone Funct. 22 Trouble Restoral	3322	00		
Zone Funct. 23 Trouble Restoral	3323	00		
Zone Funct. 24 Trouble Restoral	3324	00		
Zone Funct. 25 Trouble Restoral	3325	00		
Zone Funct. 26 Trouble Restoral	3326	00		
Zone Funct. 27 Trouble Restoral	3327	00		
Zone Funct. 28 Trouble Restoral	3328	00		
Zone Funct. 29 Trouble Restoral	3329	00		
Zone Funct. 30 Trouble Restoral	3330	00		
Open	3331	00		
Close	3332	00		
Duress	3333	00		
Partial Close	3334	00		
First Open After Alarm	3335	00		
Low Battery	3336	00		

Report	Address	Default	Reporting Digit 1	Extended Digit 2
Low Battery Restoral	3337	00		
AC Failure	3338	00		
AC Restoral	3339	00		
Comm. Test/System Normal	3340	00		
Remote Program Successful	3341	00		
Remote Prog. Unsuccessful	3342	00		
Local Program Successful	3343	00		
Local Program Unsuccessful	3344	00		
System Trouble	3345	00		
System Trouble Restoral	3346	00		
Comm Test/System Off Norm	3347	00		
Exit Error	3348	00		
Recent Closing	3349	00		
System Walk Test	3350	00		
System Walk Test Restoral	3351	00		
Fire Walk Test	3352	00		
Fire Walk Test Restoral	3353	00		
Low Temperature	3354	00		
Low Temperature Restoral	3355	00		
Dirty Smoke Chamber	3356	00		
Dirty Chamber Restoral	3357	00		
Zone Funct. 1 Bypass	3358	00		
Zone Funct. 2 Bypass	3359	00		
Zone Funct. 3 Bypass	3360	00		
Zone Funct. 4 Bypass	3361	00		
Zone Funct. 5 Bypass	3362	00		
Zone Funct. 6 Bypass	3363	00		
Zone Funct. 7 Bypass	3364	00		
Zone Funct. 8 Bypass	3365	00		
Zone Funct. 9 Bypass	3366	00		
Zone Funct. 10 Bypass	3367	00		
Zone Funct. 11 Bypass	3368	00		
Zone Funct. 12 Bypass	3369	00		
Zone Funct. 13 Bypass	3370	00		
Zone Funct. 14 Bypass	3371	00		
Zone Funct. 15 Bypass	3372	00		
Zone Funct. 16 Bypass	3373	00		
Zone Funct. 17 Bypass	3374	00		
Zone Funct. 18 Bypass	3375	00		
Zone Funct. 19 Bypass	3376	00		
Zone Funct. 20 Bypass	3377	00		
Zone Funct. 21 Bypass	3378	00		
Zone Funct. 22 Bypass	3379	00		
Zone Funct. 23 Bypass	3380	00		
Zone Funct. 24 Bypass	3381	00		
Zone Funct. 25 Bypass	3382	00		
Zone Funct. 26 Bypass	3383	00		
Zone Funct. 27 Bypass	3384	00		
Zone Funct. 28 Bypass	3385	00		
Zone Funct. 29 Bypass	3386	00		

Report	Address	Default	Reporting Digit 1	Extended Digit 2
Zone Funct. 30 Bypass	3387	00		
Zone Funct. 1 Bypass Restore	3388	00		
Zone Funct. 2 Bypass Restore	3389	00		
Zone Funct. 3 Bypass Restore	3390	00		
Zone Funct. 4 Bypass Restore	3391	00		
Zone Funct. 5 Bypass Restore	3392	00		
Zone Funct. 6 Bypass Restore	3393	00		
Zone Funct. 7 Bypass Restore	3394	00		
Zone Funct. 8 Bypass Restore	3395	00		
Zone Funct. 9 Bypass Restore	3396	00		
Zone Funct. 10 Bypass Restore	3397	00		
Zone Funct. 11 Bypass Restore	3398	00		
Zone Funct. 12 Bypass Restore	3399	00		
Zone Funct. 13 Bypass Restore	3400	00		
Zone Funct. 14 Bypass Restore	3401	00		
Zone Funct. 15 Bypass Restore	3402	00		

Report	Address	Default	Reporting Digit 1	Extended Digit 2
Zone Funct. 16 Bypass Restore	3403	00		
Zone Funct. 17 Bypass Restore	3404	00		
Zone Funct. 18 Bypass Restore	3405	00		
Zone Funct. 19 Bypass Restore	3406	00		
Zone Funct. 20 Bypass Restore	3407	00		
Zone Funct. 21 Bypass Restore	3408	00		
Zone Funct. 22 Bypass Restore	3409	00		
Zone Funct. 23 Bypass Restore	3410	00		
Zone Funct. 24 Bypass Restore	3411	00		
Zone Funct. 25 Bypass Restore	3412	00		
Zone Funct. 26 Bypass Restore	3413	00		
Zone Funct. 27 Bypass Restore	3414	00		
Zone Funct. 28 Bypass Restore	3415	00		
Zone Funct. 29 Bypass Restore	3416	00		
Zone Funct. 30 Bypass Restore	3417	00		
Keypad Tamper	3418	00		
Keypad Tamper Restoral	3419	00		

10.28 Phone/DS7416i Routing Control: Program Addresses (3153-3154)

If address 3155 is programmed to “Try DS7416i first”, the following addresses can be used to control report routing. If address 3155 is set to “Send alarms via both DS7416i and digital”, this will force alarms to go to the phone even if the Phone/DS7416i report routing for alarms does not specify phone usage.

Phone/DS7416i report routing (3153).
First digit: Open and Close Reports.

Select Options	Enter the DD as a: 1	2	3	7	*1	*5
Use Phone	●		●	●	●	●
Use DS7416i		●	●	●	●	●
Use Either			●		●	
Use Both				●		●
Try Phone First					●	●

Data Digit
1 2

Second digit: Zone Alarm, Zone Restoral, and Zone Trouble Reports.

Select Options	Enter the DD as a: 1	2	3	7	*1	*5
Use Phone	●		●	●	●	●
Use DS7416i		●	●	●	●	●
Use Either			●		●	
Use Both				●		●
Try Phone First					●	●

Phone/DS7416i report routing and Phone First count (3154)

First Digit: System Reports.

Select Options	Enter the DD as a: 1	2	3	7	*1	*5
Use Phone	●		●	●	●	●
Use DS7416i		●	●	●	●	●
Use Either			●		●	
Use Both				●		●
Try Phone First					●	●

Data Digit
1 2

Select Option	DD	Select Option	DD	Select Option	DD	Select Option	DD
0 Attempts	0	4 Attempts	4	8 Attempts	8	12 Attempts	*2
1 Attempt	1	5 Attempts	5	9 Attempts	9	13 Attempts	*3
2 Attempts	2	6 Attempts	6	10 Attempts	*0	14 Attempts	*4
3 Attempts	3	7 Attempts	7	11 Attempts	*1	15 Attempts	*5

Second digit: Phone First count. Number of attempts before trying the DS7416i:

This value is used to control the number of attempts made on the phone line before switching to the DS7416i. This value is only referenced if the “Use Phone”, “Use DS7416i”, and “Try Phone First” options are all selected. If the value is less than or equal to 2, or more than 5, two attempts will be made on the phone before trying the DS7416i if the Phone First option is selected.

10.29 Account Code Programming: Program Addresses (3429-3459)

Account Code programming defines the number transmitted to the central station that identifies this panel. It also identifies which partition is reporting from this panel.

		Data Digits 1	2	3	4
Partition 1	Phone #1 Account Code = Address 3429				
	Phone #2 Account Code = Address 3431				
Partition 2	Phone #1 Account Code = Address 3433				
	Phone #2 Account Code = Address 3435				
Partition 3	Phone #1 Account Code = Address 3437				
	Phone #2 Account Code = Address 3439				
Partition 4	Phone #1 Account Code = Address 3441				
	Phone #2 Account Code = Address 3443				
Partition 5	Phone #1 Account Code = Address 3445				
	Phone #2 Account Code = Address 3447				
Partition 6	Phone #1 Account Code = Address 3449				
	Phone #2 Account Code = Address 3451				
Partition 7	Phone #1 Account Code = Address 3453				
	Phone #2 Account Code = Address 3455				
Partition 8	Phone #1 Account Code = Address 3457				
	Phone #2 Account Code = Address 3459				

The Default for all Account Codes = 0000

NOTES

1. Account Codes are programmed from left to right. If programming a 3 digit Account Code, the fourth digit of the address must be “0.” For example: If the Account Code is 121, program 1210 in the programming address.

2. If you wish to send a zero “0,” enter it as *0 (this does not apply to the added zero in a three digit Account Code). For example: If the Account Code is 101, program 1*010 in the programming address. If the Account Code is 3050, program 3*05*0 in the programming address.

10.30 Phone Number General Control Programming: Program Address (3155)

See Glossary (section 6.14) for further details.

Data Digit 1 2

Select Options	Enter the Data Digit as a: 0	1	2	3	4	5	6	7	8	9	*0	*1
Enable remote programmer call-back		●		●		●		●		●		●
Dial pulse on all phone numbers	●	●					●	●				
Dial tone on all phone numbers**					●	●					●	●
Dial tone, switch to pulse if required			●	●					●	●		
ΔΔ Try DS7416i first							●	●	●	●	●	●

*0 - *1 are Hex values. They will display as A - B at the keypads.
ΔΔ = If this option is selected, see address 3153-3154.
** = Required on PBX systems

Select Options	Enter the Data Digit as a: 0	1	2	3	4	5	6	7	8	9	*0	*1	*2	*3	*4	*5
Dialer delay of 15 sec. on non-24H burglar alarms only**		●		●		●		●		●		●		●		●
Dialer delay of 15 sec. on 24H burglar & fire alarms only**			●	●			●	●			●	●			●	●
Send alarms via **either** DS7416i **or** digital Δ	●	●	●	●					●	●	●	●				
ΔΔ Send alarms via **both** DS7416i **and** digital Δ ***					●	●	●	●					●	●	●	●
Use 110 Baud comm. for WDSRP	●	●	●	●	●	●	●	●								
Use 300 Baud comm. for WDSRP									●	●	●	●	●	●	●	●

*0 - *5 are Hex values. They will display as A - F at the keypads.

Δ = Only applicable when using the DS7416i option.
ΔΔ = If this option is selected, see address 3153-3154.
** = These selections can only be used with systems that have only one partition.
*** = This selection must be chosen for UL Listed Requirements when using the DS7416i module.

10.31 Phone Number Format Programming: Program Addresses (3156-3157)

NOTE: Phone Number 1 Format = Address 3156
Phone Number 2 Format = Address 3157
When using the DS7416i Advanced Radio Communications Module:
Program address 3156 as:
data digit 1 = 9, data digit 2 = 1.
Program address 3157 as:
data digit 1 = 9, data digit 2 = 1.

Data Digit 1 2

Select Option	DD
Phone Number Disabled	0
3/1 (no Extended Reporting)	1
3/1E (Extended Reporting)	2
3/1 with Parity	3
3/1E with Parity	4
4/1	5
4/2	6
BFSK	7
SIA 110 Baud	8
Contact ID	9
SIA 300 Baud	*0
Personal Dialing	*2
Pager	*5

Select Options	Enter the DD as a: 0	1	2	3	4	5
1900 Hz. Data/1400 Hz. Acknowledge	●		●		●	
1800 Hz. Data/2300 Hz. Acknowledge		●		●		●
BFSK, SIA, Contact ID		●				
10 Pulses per Second (PPS)	●	●				
20 Pulses per Second (PPS)			●	●		
40 Pulses per Second (PPS)					●	●

*0, *2, and *5 are Hex values. They will display as A, C, and F at the keypads.

10.31.1 Compatible Receivers

The following table lists those Digital Alarm Communicator Receivers and Formats that are compatible with the DS7400Xi.

NOTE: Contact your central station regarding which format to use and if a special line card is required.

`l` = The Format type the DS7400Xi supports and the Digital Alarm Communicator Receiver accepts.

Receiver	Format								
	3/1	3/1 E (Extended)	3/1 w/Parity	3/1 E w/Parity	4/1	4/2	BFSK	Contact ID	SIA
ADEMCO: Model 685	●	●	●	●	●	●	●	●	
F.B.I.: Model CP-220	●	●	●	●	●	●	●	●	
I.T.I.: Model CS-4000	●	●			●	●	●		
Osborne-Hoffman: Model II	●	●	●	●	●	●	●	●	●
Radionics: Model 6000	●	●	●	●			●		
Radionics: Model 6500	●	●	●	●	●	●	●		
Radionics: Model 6600	●	●	●	●	●	●	●	●	●
Silent Knight: Model 9000	●	●	●	●	●	●	●		●
Varitech: Model V-300	●	●	●	●	●	●	●		

10.32 Phone Answering Programming: Program Address (3158)

See Glossary (section 6.15) for further details.

Data Digit

1	2

Select Option When Armed:	
Don't Answer Phone	0
Answer Phone on 1 ring**	1
Answer Phone on 2 rings	2
Answer Phone on 3 rings**	3
Answer Phone on 4 rings	4
Answer Phone on 5 rings**	5
Answer Phone on 6 rings	6
Answer Phone on 7 rings**	7
Answer Phone on 8 rings	8
Answer Phone on 9 rings**	9
Answer Phone on 10 rings	*0
Answer Phone on 11 rings**	*1
Answer Phone on 12 rings	*2
Answer Phone on 13 rings**	*3
Answer Phone on 14 rings	*4
Answer Phone on 15 rings**	*5

*0 - *5 are Hex values.
They will display as A - F at the keypads.

** = Overrides answering machine.
The Panel will answer on the first ring of the second call made within one minute.

Select Option When Disarmed:	
Don't Answer Phone	0
Answer Phone on 1 ring**	1
Answer Phone on 2 rings	2
Answer Phone on 3 rings**	3
Answer Phone on 4 rings	4
Answer Phone on 5 rings**	5
Answer Phone on 6 rings	6
Answer Phone on 7 rings**	7
Answer Phone on 8 rings	8
Answer Phone on 9 rings**	9
Answer Phone on 10 rings	*0
Answer Phone on 11 rings**	*1
Answer Phone on 12 rings	*2
Answer Phone on 13 rings**	*3
Answer Phone on 14 rings	*4
Answer Phone on 15 rings**	*5

*0 - *5 are Hex values.
They will display as A - F at the keypads.

** = Overrides answering machine.
The Panel will answer on the first ring of the second call made within one minute.

10.33 Pager Delay Time: Program Address (4038)

When using the Pager Dialing Format (selected in Addresses 3156 and 3157), you may insert a delay time after the phone number is dialed and before the reports are sent to the pager system. This delay can be used to allow for greeting and instruction messages in the pager system. This delay will not affect any other report formats.

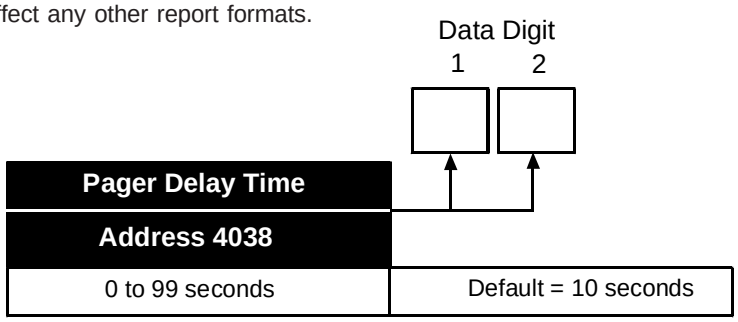

10.34 Programmer's and Master Code Programming: Program Addresses (7589-7592)

Programmer's Code programming defines what the Programmer's Code will be. This code is used to enter the programming mode from the keypads.

IMPORTANT

Although the DS7400Xi (Ver. 4+) Control/Communicator is shipped with 6-digit codes preprogrammed, it is also shipped with a 4-digit PIN length default. The default codes for the Programmer's Code and the Master Code will be 4-digits (9876 and 1234 respectively) unless you have reprogrammed for a 6-digit PIN length.

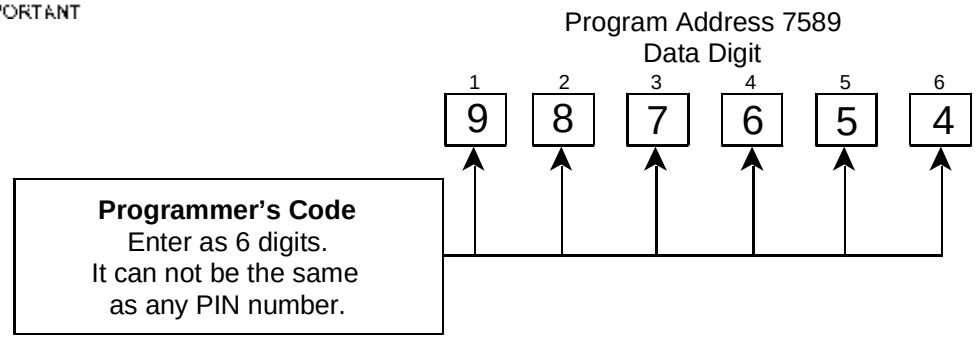

The Default for the Programmer's Code = 987654

Master Code programming defines what the Master Code will be. This code is the highest authority level for a PIN.
If the Master Code is lost, this address may be used to program a new one.
Otherwise, the Master Code Programming Mode should be used to create PINs that have a Master Code authority level.

Master Code for User Number 001 has its authority fixed at level 0. It will always have access to all partitions.

NOTE: User Numbers 002 through 200 must be programmed from the Master Code Programming Mode.

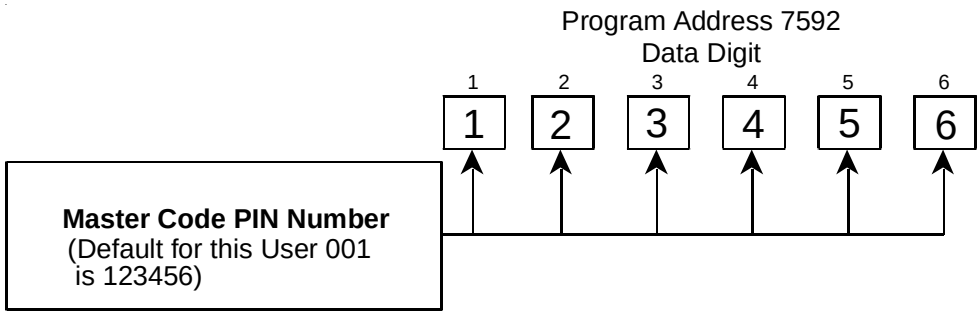

10.35 PIN Length Programming: Program Address (3478)

PIN Length Programming defines the length of the PINs that are assigned to each user. PINS can be programmed to be 4 or 6 digits in length.

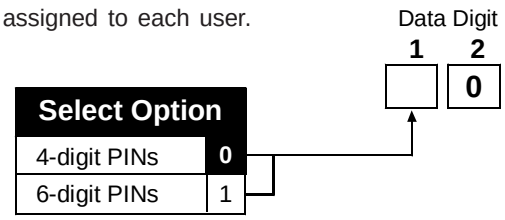

10.36 Octal Relay Module Output Programming

10.36.1 Follow Action: Program Addresses (2740-2771)

To program an Octal Relay Module for Follow Action, follow the steps below.

1. Select Octal Relay to program.
2. Program Data Digit 1 of Program Address A as **1** for Follow Action.
3. Program Data Digit 2 of Program Address A for the desired function.
4. Program Data Digit 1 and 2 of Program Address B for the desired function.

Once both Address A and Address B have been programmed, proceed to program the next Octal Relay.

The Octal Relay Module is the DS7488. **See section 1.18 and 6.4 for further details.**

NOTE: If a DS9484 is used, it replaces the DS7488 and takes up outputs 1-4 of the Octal Relay Module. Outputs 5-8 of the Octal Relay Module are unavailable. If two DS9484 power supplies are used, one replaces Octal Relay Module 1 and the other replaces Octal Relay Module 2.

IMPORTANT

For Octal Relay Partition Assignment, **see section 10.36.5.**

Program Address A

Data Digit

1	2
1	

SELECT OPTION DD 2				
Follows	0	1	2	3
Disabled	●			
Burglar Alarm		●		●
Fire Alarm			●	●

Octal Relay #	DS7488-1 Address A	DS7488-1 Address B
1	2740	2741
2	2742	2743
3	2744	2745
4	2746	2747
5	2748	2749
6	2750	2751
7	2752	2753
8	2754	2755
9	2756	2757
10	2758	2759
11	2760	2761
12	2762	2763
13	2764	2765
14	2766	2767
15	2768	2769
16	2770	2771

Program Address B

Data Digit

1	2

SELECT OPTION DD 1 & 2	DD
Latch ON after Zone Alarm**	0 0
ON during Entry Pre-Alert	0 1
ON for 10 sec. after pressing [System Reset]	0 2
ON for Any Armed state	0 3
Ground Start	0 4
System Status (Ready to Arm)	0 5
Zone Alarm	0 6
Zone Alarm delayed by 20 seconds	0 7
Keypad Sounder Output	0 8
Access Output (10 sec. pulse)	0 9
Future Selection	0*0
Panic/Duress Output***	0*1
ON when System is Partial	0*2
ON when System is Fully Armed	0*3

** = This includes invisible zones. See glossary for further details.
*** = See section 6.4 for description of this option.

10.36 Octal Relay Module Output Programming (continued)

10.36.2 **Follow System Wide Event**: Program Addresses (2740-2771)

To program an Octal Relay Module for Follow System Wide Event, follow the steps below.

1. Select Octal Relay to program.
2. Program Data Digit 1 of Program Address A as **2** for Follow System Wide Event.
3. Program Data Digit 2 of Program Address A for the desired function.
4. Program Data Digit 1 and 2 of Program Address B for the desired function.

Once both Address A and Address B have been programmed, proceed to program the next Octal Relay.

IMPORTANT For Octal Relay Partition Assignment, **see section 10.36.5.**

Program Address A

Data Digit

1	2
2	

SELECT OPTION DD 2				
Follows	0	1	2	**3**
Disabled	●			
Burglar Alarm		●		●
Fire Alarm			●	●

Octal Relay #	DS7488-1 Address A	DS7488-1 Address B
1	2740	2741
2	2742	2743
3	2744	2745
4	2746	2747
5	2748	2749
6	2750	2751
7	2752	2753
8	2754	2755
9	2756	2757
10	2758	2759
11	2760	2761
12	2762	2763
13	2764	2765
14	2766	2767
15	2768	2769
16	2770	2771

Program Address B

Data Digit

1	2

SELECT OPTION DD 1 & 2	DD
Disabled	0 0
AC Power Fail	0 1
Low Battery	0 2
Communicator Failure	0 3
System Fault*	0 4
Keypad Supervision Fault	0 5
Multiplex Bus Fault	0 6
RF Receiver Fault	0 7
Aux Power Fault	0 8
Fire Zone Trouble	0 9
Supervisory	0*0
Zone Trouble	0*1
Duress	0*2
Battery Test	0*3
Future Selection	0*4
Future Selection	0*5

*System Faults include:

- RAM fault
- ROM fault
- Bell/Line Monitor fault (DS7420i)
- Line 1 fault
- Line 2 fault
- Bell fault
- Aux. Power fault
- Octal Relay fault
- Serial Module fault (DS7412)
- Serial Transmit fault
- Serial Receive fault
- Aux. Relay fault
- DS7416i Communication fault
- RF Receiver Tamper
- RF Receiver Jammed
- RF Receiver Trouble
- Printer Off-line

10.36 Octal Relay Module Output Programming (continued)

10.36.3 Follow Function: Program Addresses (2740-2771)

To program an Octal Relay Module for Follow Output Function, follow the steps below.

1. Select Octal Relay to program.
2. Program Data Digit 1 of Program Address A as **3** for Follow Function.
3. Program Data Digit 2 of Program Address A for the desired function.
4. Program Data Digit 1 and 2 of Program Address B for the desired function.

Once both Address A and Address B have been programmed, proceed to program the next Octal Relay.

IMPORTANT

For Octal Relay Partition Assignment, **see section 10.36.5.**

Program Address A

Data Digit

1	2
3	

SELECT OPTION DD 2				
Follows	0	1	2	3
Disabled	●			
Burglar Alarm		●		●
Fire Alarm			●	●

Octal Relay #	DS7488-1 Address A	DS7488-1 Address B
1	2740	2741
2	2742	2743
3	2744	2745
4	2746	2747
5	2748	2749
6	2750	2751
7	2752	2753
8	2754	2755
9	2756	2757
10	2758	2759
11	2760	2761
12	2762	2763
13	2764	2765
14	2766	2767
15	2768	2769
16	2770	2771

Program Address B

Data Digit

1	2

SELECT OPTION DD 1 & 2	DD
Disabled	0 0
Follow Output Function 1	0 1
Follow Output Function 2	0 2
Follow Output Function 3	0 3
Follow Output Function 4	0 4
Follow Output Function 5	0 5
Follow Output Function 6	0 6
Follow Output Function 7	0 7
Follow Output Function 8	0 8
Follow Output Function 9	0 9
Follow Output Function 10	0 *0
Follow Output Function 11	0 *1
Follow Output Function 12	0 *2
Follow Output Function 13	0 *3
Follow Output Function 14	0 *4
Follow Output Function 15	0 *5
Follow Output Function 16	1 0
Follow Output Function 17	1 1
Follow Output Function 18	1 2
Follow Output Function 19	1 3
Follow Output Function 20	1 4
Follow Output Function 21	1 5
Follow Output Function 22	1 6
Follow Output Function 23	1 7
Follow Output Function 24	1 8

10.36 Octal Relay Module Output Programming (continued)

10.36.4 Follow Zone: Program Addresses (2740-2771)

To program an Octal Relay Module for Follow Zone, follow the steps below.

1. Select Octal Relay to program.
2. Program Data Digit 1 of Program Address A as **4** for Follow Zone.
3. Program Data Digit 2 of Program Address A for the desired function.
4. Program Data Digit 1 and 2 of Program Address B for the desired zone.

Once both Address A and Address B have been programmed, proceed to program the next Octal Relay.

Program Address A

Data Digit

1	2
4	

Program Address B

Data Digit

1	2

Program the HEX value of the Zone from the chart on the next page

Octal Relay #	DS7488-1 Address A	DS7488-1 Address B
1	2740	2741
2	2742	2743
3	2744	2745
4	2746	2747
5	2748	2749
6	2750	2751
7	2752	2753
8	2754	2755
9	2756	2757
10	2758	2759
11	2760	2761
12	2762	2763
13	2764	2765
14	2766	2767
15	2768	2769
16	2770	2771

SELECT OPTION DD 2

Activate:	0	1	2	3	4	5	6	7	8	9	*0	*1	*2
Disabled	●												
When zone is shorted		●	●	●	●	●	●	●	●	●	●	●	●
When Zone is opened			●		●		●		●		●		●
When panel is Armed		●	●			●	●	●	●			●	●
When panel is not Armed				●	●	●	●			●	●	●	●
Latch when activated**								●	●	●	●	●	●

** = This applies **only** to the DS7465 outputs.
DS7488 outputs will **not** latch when this is selected.

Zone HEX Values

Zone	HEX	Zone	HEX	Zone	HEX	Zone	HEX
1	01	33	21	65	41	97	61
2	02	34	22	66	42	98	62
3	03	35	23	67	43	99	63
4	04	36	24	68	44	100	64
5	05	37	25	69	45	101	65
6	06	38	26	70	46	102	66
7	07	39	27	71	47	103	67
8	08	40	28	72	48	104	68
9	09	41	29	73	49	105	69
10	0*0	42	2*0	74	4*0	106	6*0
11	0*1	43	2*1	75	4*1	107	6*1
12	0*2	44	2*2	76	4*2	108	6*2
13	0*3	45	2*3	77	4*3	109	6*3
14	0*4	46	2*4	78	4*4	110	6*4
15	0*5	47	2*5	79	4*5	111	6*5
16	10	48	30	80	50	112	70
17	11	49	31	81	51	113	71
18	12	50	32	82	52	114	72
19	13	51	33	83	53	115	73
20	14	52	34	84	54	116	74
21	15	53	35	85	55	117	75
22	16	54	36	86	56	118	76
23	17	55	37	87	57	119	77
24	18	56	38	88	58	120	78
25	19	57	39	89	59	121	79
26	1*0	58	3*0	90	5*0	122	7*0
27	1*1	59	3*1	91	5*1	123	7*1
28	1*2	60	3*2	92	5*2	124	7*2
29	1*3	61	3*3	93	5*3	125	7*3
30	1*4	62	3*4	94	5*4	126	7*4
31	1*5	63	3*5	95	5*5	127	7*5
32	20	64	40	96	60	128	80

Zone	HEX	Zone	HEX	Zone	HEX	Zone	HEX
129	81	161	*01	193	*21	225	*41
130	82	162	*02	194	*22	226	*42
131	83	163	*03	195	*23	227	*43
132	84	164	*04	196	*24	228	*44
133	85	165	*05	197	*25	229	*45
134	86	166	*06	198	*26	230	*46
135	87	167	*07	199	*27	231	*47
136	88	168	*08	200	*28	232	*48
137	89	169	*09	201	*29	233	*49
138	8*0	170	*0*0	202	*2*0	234	*4*0
139	8*1	171	*0*1	203	*2*1	235	*4*1
140	8*2	172	*0*2	204	*2*2	236	*4*2
141	8*3	173	*0*3	205	*2*3	237	*4*3
142	8*4	174	*0*4	206	*2*4	238	*4*4
143	8*5	175	*0*5	207	*2*5	239	*4*5
144	90	176	*10	208	*30	240	*50
145	91	177	*11	209	*31	241	*51
146	92	178	*12	210	*32	242	*52
147	93	179	*13	211	*33	243	*53
148	94	180	*14	212	*34	244	*54
149	95	181	*15	213	*35	245	*55
150	96	182	*16	214	*36	246	*56
151	97	183	*17	215	*37	247	*57
152	98	184	*18	216	*38	248	*58
153	99	185	*19	217	*39		
154	9*0	186	*1*0	218	*3*0		
155	9*1	187	*1*1	219	*3*1		
156	9*2	188	*1*2	220	*3*2		
157	9*3	189	*1*3	221	*3*3		
158	9*4	190	*1*4	222	*3*4		
159	9*5	191	*1*5	223	*3*5		
160	*00	192	*20	224	*40		

10.36 Octal Relay Module Output Programming (continued)

10.36.5 Octal Relay Module Output Partition Assignment: Program Addresses (2844-2851)

Program Address 2844

Data Digit 1	Data Digit 2
Relay 1 default = 8	Relay 2 default = 8

Program Address 2845

Data Digit 1	Data Digit 2
Relay 3 default = 8	Relay 4 default = 8

Program Address 2846

Data Digit 1	Data Digit 2
Relay 5 default = 8	Relay 6 default = 8

Program Address 2847

Data Digit 1	Data Digit 2
Relay 7 default = 8	Relay 8 default = 8

Program Address 2848

Data Digit 1	Data Digit 2
Relay 9 default = 0	Relay 10 default = 0

Program Address 2849

Data Digit 1	Data Digit 2
Relay 11 default = 0	Relay 12 default = 0

Program Address 2850

Data Digit 1	Data Digit 2
Relay 13 default = 0	Relay 14 default = 0

Program Address 2851

Data Digit 1	Data Digit 2
Relay 15 default = 0	Relay 16 default = 0

Select Option	DD
Belongs to Partition 1	0
Belongs to Partition 2	1
Belongs to Partition 3	2
Belongs to Partition 4	3
Belongs to Partition 5	4
Belongs to Partition 6	5
Belongs to Partition 7	6
Belongs to Partition 8	7
Follows all Partitions	**8**

10.37 Output Function Programming: Program Addresses (2772-2843)

Output programming allows you to have the Outputs follow status events by partition or system-wide, or follow zone outputs in an Input/Output Cross Matrix. See the Programming Addresses Worksheet (P/N: 43850) for a description of each address. **See Glossary (section 6.4) for further details.**

Select Option	DD
Latch ON after Zone Alarm	0
ON during Entry Pre-Alert	1
ON when system is armed	3
Zone alarm	6
Zone Alarm delayed by 20 sec.	7
Keypad Sounder output	8
Access output (10 sec. pulse)	9
Keyfob output	*0
Panic/Duress output**	*1
Follow System Status Event	*2
Follow a single zone	*3
Follow two zones-When EITHER zone changes state	*4
Follow two zones-When BOTH zones change state	*5

Data Digit 1 Options 1-9 and *1 are used to program an Output Function to follow status events for individual partitions.

Data Digit 1 Option *0 is used to program an Output Function to follow the Wireless Keyfob Output Buttons.

Data Digit 1 Option *2 is used to program an Output Function to follow status events system-wide.

Data Digit 1 Options *3-*5 are used to program an Output Function to follow a zone or two zones in an Input/Output Cross Matrix.

Program Address 1 — Data Digit 1 2

Program Address 1 — Data Digit 1 2

Option	RF3334	DD
Disabled		0
Moment	Option Key	1
Toggle	Option Key	2
Moment		3
Toggle		4

Follows	Data Digit 0	1	2	3
Disabled	●			
Burglar Alarm		●		●
Fire Alarm			●	●

Data Digit 1 2

*0-*5 are Hex values. They will display as A-F at the keypads.

*2

Select Option	DD	DD	Select Option
AC Power Failure	1	7	Radio Receiver Fault
Low Battery	2	8	Aux Power Fault
Communication Failure	3	9	Fire Trouble
System Fault**	4	*0	Supervisory
Keypad Supervision Fault	5	*1	Zone Trouble
Multiplex Bus Fault	6	*2	Duress PIN

*0 - *2 are Hex values. They will display as A - C at the keypads.

****System Faults include:**

- RAM fault
- ROM fault
- Bell/Line Monitor fault (DS7420i)
- Line 1 fault
- Line 2 fault
- Bell fault
- Aux. Power fault
- Octal Relay fault
- Serial Module fault (DS7412)
- Serial Transmit fault
- Serial Receive fault
- Aux. Relay fault
- DS7416i Communications fault
- RF Receiver Tamper
- RF Receiver Jammed
- RF Receiver Trouble
- Printer Off-line

Program Address 1 — Data Digit 1 2

Program Address 2 — Data Digit 1 2

Program Address 3 — Data Digit 1 2

Enter the Zone Number of First Zone to Follow (see Zone HEX Values chart)

Enter the Zone Number of Second Zone to Follow (see Zone HEX Values chart)

Not Required if following a single zone

Data Digit 1 2

3

Follows	Data Digit 0	1	2	3
Disabled	●			
Armed Full		●		
Armed Partial			●	
Armed Any				●

Output Function Number	Program Address	Program Address	Program Address
1	2772	2773	2774
2	2775	2776	2777
3	2778	2779	2780
4	2781	2782	2783
5	2784	2785	2876
6	2787	2788	2789
7	2790	2791	2792
8	2793	2794	2795
9	2796	2797	2798
10	2799	2800	2801
11	2802	2803	2804
12	2805	2806	2807
13	2808	2809	2810
14	2811	2812	2813
15	2814	2815	2816
16	2817	2818	2819
17	2820	2821	2822
18	2823	2824	2825
19	2826	2827	2828
20	2829	2830	2831
21	2832	2833	2834
22	2835	2836	2837
23	2838	2839	2840
24	2841	2842	2843

	Enter Data Digit as a:												
Activate:	0	1	2	3	4	5	6	7	8	9	*0	*1	*2
Disabled	●												
When zone is shorted		●	●	●	●	●	●	●	●	●	●	●	●
When Zone is opened			●		●		●		●		●		●
When panel is Armed		●	●			●	●	●	●			●	●
When panel is not Armed				●	●	●	●			●	●	●	●
Latch when activated**								●	●	●	●	●	●

** = This is only for DS7465 Outputs. DS7488 Outputs will not latch when this is selected.

10.37.1 Output Function Partition Assignment: Program Addresses (2852-2863)

Program Address	Data Digit 1	Data Digit 2
2852	Function 1	Function 2
2853	Function 3	Function 4
2854	Function 5	Function 6
2855	Function 7	Function 8
2856	Function 9	Function 10
2857	Function 11	Function 12
2858	Function 13	Function 14
2859	Function 15	Function 16
2860	Function 17	Function 18
2861	Function 19	Function 20
2862	Function 21	Function 22
2863	Function 23	Function 24

Select Option	DD
Belongs to Partition 1	0
Belongs to Partition 2	1
Belongs to Partition 3	2
Belongs to Partition 4	3
Belongs to Partition 5	4
Belongs to Partition 6	5
Belongs to Partition 7	6
Belongs to Partition 8	7
Follows all Partitions	8

10.38 Dual Phone Line/Bell Supervision Module Output Programming: Program Address (4021)

The Dual Phone Line/Bell Supervision Module is the DS7420i. **See section 1.18 for further details.**
When in Central Station or Local Commercial Fire Mode, this address will be forced to specific values (**see sections 10.16.1 and 10.16.2**).

Options	Enter the Data Digit as a: 0	1	2	3	4	5	6	7	8	9
Disabled	●									
Bell Monitor				●	●	●			●	●
Phone Line 1 Monitor		●	●		●	●	●	●	●	●
Phone Line 2 Monitor			●			●		●		●
Alarm Output on line fault							●	●	●	●

Data Digit

1	2
	0

Data Digit 2 must be a 0.

10.39 Call-Out Timer Programming: Program Addresses (4022-4025)

This section allows you to define the Hour and Minute for the Communicator Test Report and Remote Programmer Call-Out. The default time for the Communicator Test Report to be sent and for the control to call the Remote Programmer is Midnight.

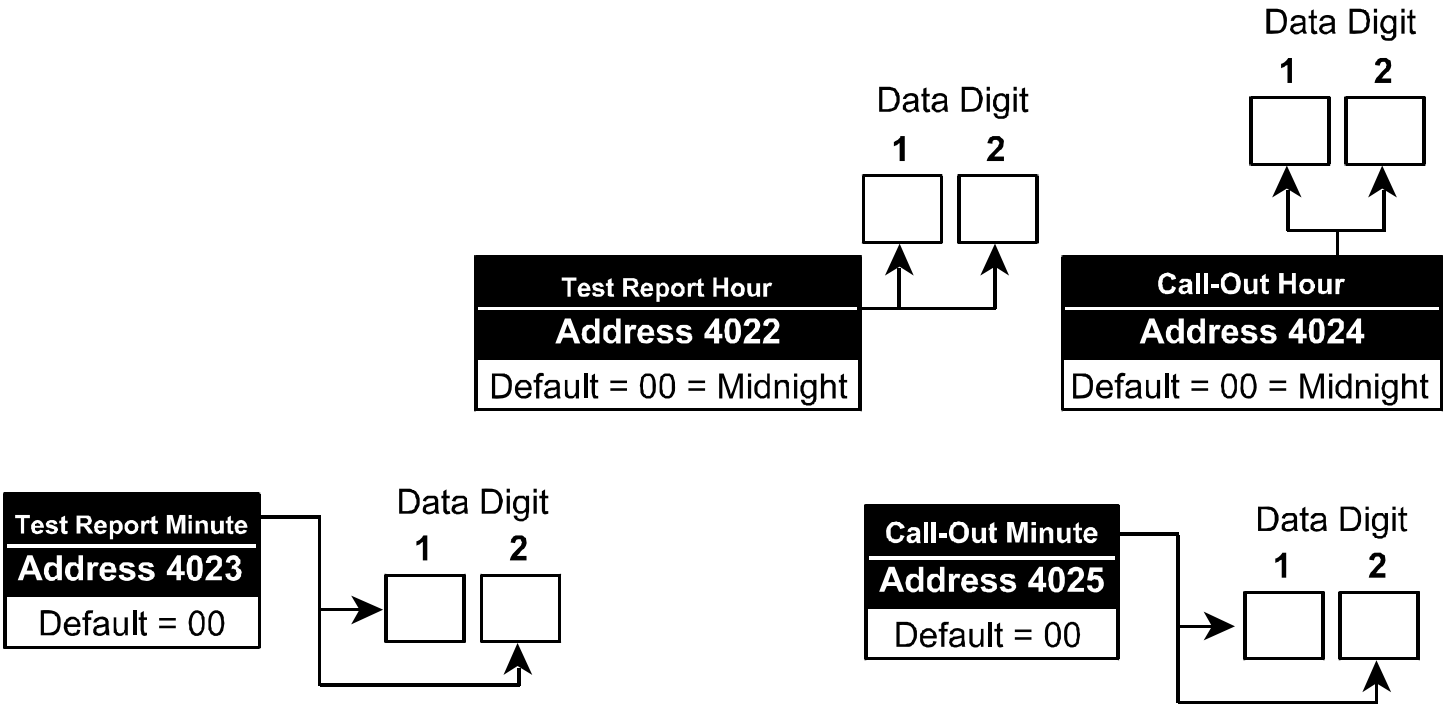

10.40 Test Report and Remote Programmer Call-Out Programming: Program Address (4026)

This section allows you to define the Day and Frequency for the Communicator Test Report and the Remote Programmer Call-Out. If this address is not programmed, the Communicator Test Report will not be sent and the control will not call the Remote Programmer.

Data Digit
1 2

Select Option	DD
Do not send a Test Report	0
Send a Test Report on Sunday	1
Send a Test Report on Monday	2
Send a Test Report on Tuesday	3
Send a Test Report on Wednesday	4
Send a Test Report on Thursday	5
Send a Test Report on Friday	6
Send a Test Report on Saturday	7
Send a Test Report every day	8
Send a Test Report every 8 days	9
Send a Test Report every 28 days	*0
Send a Test Report every hour	*1
Send a Test Report every 12 hours	*2

*0 - *2 are Hex values.
They will display as A - C at the keypads.

Select Option	DD
Do not call the Remote Programmer	0
Call the Remote Programmer on Sunday	1
Call the Remote Programmer on Monday	2
Call the Remote Programmer on Tuesday	3
Call the Remote Programmer on Wednesday	4
Call the Remote Programmer on Thursday	5
Call the Remote Programmer on Friday	6
Call the Remote Programmer on Saturday	7
Call the Remote Programmer every day	8
Call the Remote Programmer every 8 days	9
Call the Remote Programmer every 28 days	*0

10.41 Alpha Description Programming: Program Addresses (0545-2720, 5001-6920)

Alpha Description Programming allows up to 16 characters to be programmed for the description of each partition or zone (e.g. “J. Hill’s Office”). If a description is less than 16 characters, leave the remaining address(es) blank. Once programmed, the descriptions will be displayed on the alpha keypads.

The following chart lists the Program Addresses used to program Alpha-Numeric characters for each partition or zone:

Partition 1 Program Address **0545 - 0560**	**Partition 5** Program Address **0609 - 0624**	**Zone 1** Program Address **0673 - 0688**	**Zone 5** Program Address **0737 - 0752**
Partition 2 Program Address **0561 - 0576**	**Partition 6** Program Address **0625 - 0640**	**Zone 2** Program Address **0689 - 0704**	**Zone 6** Program Address **0753 - 0768**
Partition 3 Program Address **0577 - 0592**	**Partition 7** Program Address **0641 - 0656**	**Zone 3** Program Address **0705 - 0720**	**Zone 7** Program Address **0769 - 0784**
Partition 4 Program Address **0593 - 0608**	**Partition 8** Program Address **0657 - 0672**	**Zone 4** Program Address **0721 - 0736**	**Zone 8** Program Address **0785 - 0800**
Zones 9 through 128 Program Addresses **0801 through 2720** (16 addresses per zone)		**Zones 129 through 248** Program Addresses **5001 through 6920** (16 addresses per zone)	

See Section 10.41.1 for an Alpha Description Programming worksheet for Partitions 1 through 8 and Zones 1 through 8.
See the Programming Addresses Worksheet (P/N: 43850) for a complete Alpha Programming Worksheet (covering addresses 0545 through 6920).

Words are created one character at a time. Each character uses two data digits.
The data digit values for these characters are shown below:

Value	Character	Value	Character	Value	Character	Value	Character
02	blank space	83	8	05	P	86	h
12	!	93	9	15	Q	96	i
22	"	*03	:	25	R	*06	j
32	#	*13	;	35	S	*16	k
42	$	*23	<	45	T	*26	l
52	%	*33	=	55	U	*36	m
62	&	*43	>	65	V	*46	n
72	'	*53	?	75	W	*56	o
82	(	04	@	85	X	07	p
92	)	14	A	95	Y	17	q
*02	*	24	B	*05	Z	27	r
*12	+	34	C	*15	[	37	s
*22	,	44	D	*25	¥	47	t
*32	-	54	E	*35	]	57	u
*42	.	64	F	*45	^	67	v
*52	/	74	G	*55	_	77	w
03	0	84	H	06	'	87	x
13	1	94	I	16	a	97	y
23	2	*04	J	26	b	*07	z
33	3	*14	K	36	c	*17	{
43	4	*24	L	46	d	*27	|
53	5	*34	M	56	e	*37	}
63	6	*44	N	66	f	*47	→
73	7	*54	O	76	g		

Example

	Character 1		Character 2		Character 3		Character 4		Character 5		Character 6		Character 7		Character 8	
Text	C		H		E		M		I		C		A		L	
Value	3	4	8	4	5	4	*3	4	9	4	3	4	1	4	*2	4
	0545-1	0545-2	0546-1	0546-2	0547-1	0547-2	0548-1	0548-2	0549-1	0549-2	0550-1	0550-2	0551-1	0551-2	0552-1	0552-2

10.41.1 Alpha Description Programming: A Worksheet

Partition 1

	Character 1	Character 2	Character 3	Character 4	Character 5	Character 6	Character 7	Character 8
Text								
Value	0545-1 0545-2	0546-1 0546-2	0547-1 0547-2	0548-1 0548-2	0549-1 0549-2	0550-1 0550-2	0551-1 0551-2	0552-1 0552-2

	Character 9	Character 10	Character 11	Character 12	Character 13	Character 14	Character 15	Character 16
Text								
Value	0553-1 0553-2	0554-1 0554-2	0555-1 0555-2	0556-1 0556-2	0557-1 0557-2	0558-1 0558-2	0559-1 0559-2	0560-1 0560-2

Partition 2

	Character 1	Character 2	Character 3	Character 4	Character 5	Character 6	Character 7	Character 8
Text								
Value	0561-1 0561-2	0562-1 0562-2	0563-1 0563-2	0564-1 0564-2	0565-1 0565-2	0566-1 0566-2	0567-1 0567-2	0568-1 0568-2

	Character 9	Character 10	Character 11	Character 12	Character 13	Character 14	Character 15	Character 16
Text								
Value	0569-1 0569-2	0570-1 0570-2	0571-1 0571-2	0572-1 0572-2	0573-1 0573-2	0574-1 0574-2	0575-1 0575-2	0576-1 0576-2

Partition 3

	Character 1	Character 2	Character 3	Character 4	Character 5	Character 6	Character 7	Character 8
Text								
Value	0577-1 0577-2	0578-1 0578-2	0579-1 0579-2	0580-1 0580-2	0581-1 0581-2	0582-1 0582-2	0583-1 0583-2	0584-1 0584-2

	Character 9	Character 10	Character 11	Character 12	Character 13	Character 14	Character 15	Character 16
Text								
Value	0585-1 0585-2	0586-1 0586-2	0587-1 0587-2	0588-1 0588-2	0589-1 0589-2	0590-1 0590-2	0591-1 0591-2	0592-1 0592-2

Partition 4

	Character 1	Character 2	Character 3	Character 4	Character 5	Character 6	Character 7	Character 8
Text								
Value	0593-1 0593-2	0594-1 0594-2	0595-1 0595-2	0596-1 0596-2	0597-1 0597-2	0598-1 0598-2	0599-1 1580-2	0599-1 0599-2

	Character 9	Character 10	Character 11	Character 12	Character 13	Character 14	Character 15	Character 16
Text								
Value	0601-1 0601-2	0602-1 0602-2	0603-1 0603-2	0604-1 0604-2	0605-1 0605-2	0606-1 0606-2	0607-1 0607-2	0608-1 0608-2

10.41.1 Alpha Description Programming: A Worksheet (Continued)

Partition 5

	Character 1	Character 2	Character 3	Character 4	Character 5	Character 6	Character 7	Character 8
Text								
Value								
	0609-1 0609-2	0610-1 0610-2	0611-1 0611-2	0612-1 0612-2	0613-1 0613-2	0614-1 0614-2	0615-1 0615-2	0616-1 0616-2

	Character 9	Character 10	Character 1	Character 12	Character 13	Character 14	Character 15	Character 16
Text								
Value								
	0617-1 0617-2	0618-1 0618-2	0619-1 0619-2	0620-1 0620-2	0621-1 0621-2	0622-1 0622-2	0623-1 0623-2	0624-1 0624-2

Partition 6

	Character 1	Character 2	Character 3	Character 4	Character 5	Character 6	Character 7	Character 8
Text								
Value								
	0625-1 0625-2	0626-1 0626-2	0627-1 0627-2	0628-1 0628-2	0629-1 0629-2	0630-1 0630-2	0631-1 0631-2	0632-1 0632-2

	Character 9	Character 10	Character 1	Character 12	Character 13	Character 14	Character 15	Character 16
Text								
Value								
	0633-1 0633-2	0634-1 0634-2	0635-1 0635-2	0636-1 0636-2	0637-1 0637-2	0638-1 0638-2	0639-1 0639-2	0640-1 0640-2

Partition 7

	Character 1	Character 2	Character 3	Character 4	Character 5	Character 6	Character 7	Character 8
Text								
Value								
	0641-1 0641-2	0642-1 0642-2	0643-1 0643-2	0644-1 0644-2	0645-1 0645-2	0646-1 0646-2	0647-1 0647-2	0648-1 0648-2

	Character 9	Character 10	Character 1	Character 12	Character 13	Character 14	Character 15	Character 16
Text								
Value								
	0649-1 0649-2	0650-1 0650-2	0651-1 0651-2	0652-1 0652-2	0653-1 0653-2	0654-1 0654-2	0655-1 0655-2	0656-1 0656-2

Partition 8

	Character 1	Character 2	Character 3	Character 4	Character 5	Character 6	Character 7	Character 8
Text								
Value								
	0657-1 0657-2	0658-1 0658-2	0659-1 0659-2	0660-1 0660-2	0661-1 0661-2	0662-1 0662-2	0663-1 0663-2	0664-1 0664-2

	Character 9	Character 10	Character 1	Character 12	Character 13	Character 14	Character 15	Character 16
Text								
Value								
	0665-1 0665-2	0666-1 0666-2	0667-1 0667-2	0668-1 0668-2	0669-1 0669-2	0670-1 0670-2	0671-1 0671-2	0672-1 0672-2

10.41.1 Alpha Description Programming: A Worksheet (Continued)

Zone 1

	Character 1	Character 2	Character 3	Character 4	Character 5	Character 6	Character 7	Character 8
Text								
Value								
	0673-1 0673-2	0674-1 0674-2	0675-1 0675-2	0676-1 0676-2	0677-1 0677-2	0678-1 0678-2	0679-1 0679-2	0680-1 0680-2

	Character 9	Character 10	Character 11	Character 12	Character 13	Character 14	Character 15	Character 16
Text								
Value								
	0681-1 0681-2	0682-1 0682-2	0683-1 0683-2	0684-1 0684-2	0685-1 0685-2	0686-1 0686-2	0687-1 0687-2	0688-1 0688-2

Zone 2

	Character 1	Character 2	Character 3	Character 4	Character 5	Character 6	Character 7	Character 8
Text								
Value								
	0689-1 0689-2	0690-1 0690-2	0691-1 0691-2	0692-1 0692-2	0693-1 0693-2	0694-1 0694-2	0695-1 0695-2	0696-1 0696-2

	Character 9	Character 10	Character 11	Character 12	Character 13	Character 14	Character 15	Character 16
Text								
Value								
	0697-1 0697-2	0698-1 0698-2	0699-1 0699-2	0700-1 0700-2	0701-1 0701-2	0702-1 0702-2	0703-1 0703-2	0704-1 0704-2

Zone 3

	Character 1	Character 2	Character 3	Character 4	Character 5	Character 6	Character 7	Character 8
Text								
Value								
	0705-1 0705-2	0706-1 0706-2	0707-1 0707-2	0708-1 0708-2	0709-1 0709-2	0710-1 0710-2	0711-1 0711-2	0712-1 0712-2

	Character 9	Character 10	Character 11	Character 12	Character 13	Character 14	Character 15	Character 16
Text								
Value								
	0713-1 0713-2	0714-1 0714-2	0715-1 0715-2	0716-1 0716-2	0717-1 0717-2	0718-1 0718-2	0719-1 0719-2	0720-1 0720-2

Zone 4

	Character 1	Character 2	Character 3	Character 4	Character 5	Character 6	Character 7	Character 8
Text								
Value								
	0721-1 0721-2	0722-1 0722-2	0723-1 0723-2	0724-1 0724-2	0725-1 0725-2	0726-1 0726-2	0727-1 0727-2	0728-1 0728-2

	Character 9	Character 10	Character 11	Character 12	Character 13	Character 14	Character 15	Character 16
Text								
Value								
	0729-1 0729-2	0730-1 0730-2	0731-1 0731-2	0732-1 0732-2	0733-1 0733-2	0734-1 0734-2	0735-1 0735-2	0736-1 0736-2

10.41.1 Alpha Description Programming: A Worksheet (Continued)

Zone 5

	Character 1	Character 2	Character 3	Character 4	Character 5	Character 6	Character 7	Character 8
Text								
Value	0737-1 0737-2	0738-1 0738-2	0739-1 0739-2	0740-1 0740-2	0741-1 0741-2	0742-1 0742-2	0743-1 0743-2	0744-1 0744-2

	Character 9	Character 10	Character 11	Character 12	Character 13	Character 14	Character 15	Character 16
Text								
Value	0745-1 0745-2	0746-1 0746-2	0747-1 0747-2	0748-1 0748-2	0749-1 0749-2	0750-1 0750-2	0751-1 0751-2	0752-1 0752-2

Zone 6

	Character 1	Character 2	Character 3	Character 4	Character 5	Character 6	Character 7	Character 8
Text								
Value	0753-1 0753-2	0754-1 0754-2	0755-1 0755-2	0756-1 0756-2	0757-1 0757-2	0758-1 0758-2	0759-1 0759-2	0760-1 0760-2

	Character 9	Character 10	Character 11	Character 12	Character 13	Character 14	Character 15	Character 16
Text								
Value	0761-1 0761-2	0762-1 0762-2	0763-1 0763-2	0764-1 0764-2	0765-1 0765-2	0766-1 0766-2	0767-1 0767-2	0768-1 0768-2

Zone 7

	Character 1	Character 2	Character 3	Character 4	Character 5	Character 6	Character 7	Character 8
Text								
Value	0769-1 0769-2	0770-1 0770-2	0771-1 0771-2	0772-1 0772-2	0773-1 0773-2	0774-1 0774-2	0775-1 0775-2	0776-1 0776-2

	Character 9	Character 10	Character 11	Character 12	Character 13	Character 14	Character 15	Character 16
Text								
Value	0777-1 0777-2	0778-1 0778-2	0779-1 0779-2	0780-1 0780-2	0781-1 0781-2	0782-1 0782-2	0783-1 0783-2	0784-1 0784-2

Zone 8

	Character 1	Character 2	Character 3	Character 4	Character 5	Character 6	Character 7	Character 8
Text								
Value	0785-1 0785-2	0786-1 0786-2	0787-1 0787-2	0788-1 0788-2	0789-1 0789-2	0790-1 0790-2	0791-1 0791-2	0792-1 0792-2

	Character 9	Character 10	Character 11	Character 12	Character 13	Character 14	Character 15	Character 16
Text								
Value	0793-1 0793-2	0794-1 0794-2	0795-1 0795-2	0796-1 0796-2	0797-1 0797-2	0798-1 0798-2	0799-1 0799-2	0800-1 0800-2

10.42 Phone Number Programming: Program Addresses (3159, 3175, 3191)

10.42.1 Phone Number 1 Programming: Program Address (3159)

1	2	3	4	5	6	7	8	9	10	11	12	13	14	15	16	17	18	19	20

21	22	23	24	25	26	27	28	29	30	31	32

10.42.2 Phone Number 2 Programming: Program Address (3175)

1	2	3	4	5	6	7	8	9	10	11	12	13	14	15	16	17	18	19	20

21	22	23	24	25	26	27	28	29	30	31	32

10.42.3 Phone Number 3 Programming: Program Address (3191)

1	2	3	4	5	6	7	8	9	10	11	12	13	14	15	16	17	18	19	20

21	22	23	24	25	26	27	28	29	30	31	32

Notes:

To dial the “*” character, enter *1 (The “*” character is sent as “1” “1” when pulse dialing).

To dial the “#” character, enter *2 (The “#” character is only valid when tone dialing).

To input a three second delay, enter *3.

To wait for the dial tone, enter *4 in the first digit.

To disable a Phone Number, enter *5 in the first digit.

(*1 - *5 are Hex values. They will display as B - F at the keypads.)

Recommendation: The phone line that the control panel is connected to should not have a Call Waiting feature. If it must have call waiting, program the code to disable call waiting and add a three second delay before the phone number. This will prevent incoming calls from interrupting a communication. For example: call waiting can be disabled in many areas by dialing *70 before the phone number for tone dial and 1170 for pulse dial.

11.0 Installation Guide for UL Listed Systems

11.1 DS7400Xi UL Listings:

- Household Fire Alarm, UL Standard UL985
- Commercial Fire Alarm (Type Service: Local, Central Station, Remote Station; Type Initiating: Automatic, Manual, Sprinkler Supervisory, and Waterflow), UL Standard UL864
- Household Burglary Alarm, UL Standard UL1023
- Police Station Connection Grades AA and A, UL Standard UL365
- Central Station Burglary Alarm Grades AA, A, B, and C; UL Standard UL1610
- Proprietary Alarm Units Grades A and AA, UL Standard UL1076

The control panel should be installed in accordance with UL Standard UL681, Installation and Classification of Mercantile and Bank Burglar Alarm Systems, or UL Standard UL1641, Installation and Classification of Residential Burglar Alarm Systems. It should also be installed in accordance with NFPA 72 for Household and Commercial Fire installations.

11.1.1 UL System Configurations

The following table shows the DS7400Xi system configuration for the various types of fire and burglar alarm service for which the product is UL Listed.

Product	UL Application										
	CSF-D	CSF-D/RF	LF	CSB-A	PP-AA	CSB-B/C	PP-A	LB-A	PSCB-D-A	PSCB-RF-A	HF/B
3007-9001 DS7400Xi	R	R	R	R	R	R	R	R	R	R	R
Standard Enclosure	1	1	1	n/a	n/a	n/a	n/a	n/a	n/a	n/a	1
Attack Enclosure	1	1	1	R	R	R	R	R	R	R	1
AE-TR16 Enclosure	R	R	R	n/a	n/a	n/a	n/a	n/a	n/a	n/a	n/a
DS7416i	n/a	R	n/a	R	R	n/a	n/a	n/a	n/a	R	n/a
DS7420i	R	4	R	4	4	n/a	n/a	n/a	n/a	4	n/a
DS7430	0	0	0	0	0	0	0	0	0	0	0
DS7432	0	0	0	0	0	0	0	0	0	0	0
DS7433	0	0	0	0	0	0	0	0	0	0	0
DS7447/DS7447E	2	2	2	3	3	3	3	3	3	3	3
DS7460	0	0	0	0	0	0	0	0	0	0	0
DS7480	n/a	n/a	n/a	n/a	n/a	n/a	n/a	n/a	n/a	n/a	R
DS7481	n/a	4	n/a	4	4	n/a	n/a	n/a	n/a	4	n/a
DS7488	0	0	0	0	0	0	0	0	0	0	0
AB12 Bell w/Housing	n/a	n/a	n/a	R	R	R	R	R	R	R	n/a

Key to Application Codes

CSF-D = Central Station Fire w/ DACT (Digital Alarm Communications Transmitter/dialer)
CSF-D/RF = Central Station Fire w/ DACT and Radio (DS7416i)
LF = Local Fire
CSB-A = Central Station Burglary, grades AA and A
PP-AA = Proprietary grade AA
CSB-B/C = Central Station Burglary, grades B and C
PP-A = Proprietary grade A
LB-A = Local Burglary, grade A
PSCB-D-A = Police Station Connected Burglary w/DACT, grade A
PSCB-RF-A = Police Station Connected Burglary w/Radio (DS7416i), grades AA and A
HF/B = Household (residential) Fire and Burglary

Configuration Codes

R = Required
0 = Optional
n/a = Not Applicable
1 = Standard or attack enclosure may be used.
2 = Either enclosure may be used. Device must be mounted to the enclosure cover, or within 20 ft. w/wiring in conduit.
3 = Either enclosure may be used.
4 = Either the DS7420i or the DS7481 must be used to monitor the phone line input to the control unit.

11.2 Installation Considerations

- Failure to install and program the control in accordance with the requirements in this section voids the listing mark of Underwriters Laboratories, Inc.
- The maximum standby battery capacity is 35 Ah @ 12 VDC.
- The total nominal standby current must not exceed 1.5 A nor 2.5 A when in alarm.
- The control must be mounted indoors and within the protected area.
- Enclosure tamper switches (if used) must be connected to a 24-hour zone.
- Grounding must be in accordance with article 250 of the NEC (NFPA 70).
- At least one UL Listed keypad with zone display must be connected.
- Zones must be connected to UL Listed, compatible devices.
- 50 Hz. AC input cannot be used in UL Listed Requirements.
- The ground wire provided with the enclosure must be connected to the “Earth GND” connection on the control and the enclosure tab.
- The keypad panic alarm output must follow the corresponding zone function’s programming (e.g. fire = pulsing [or steady if not a combination], burglary = steady). In all cases, the special emergency keys must be silent.
- The ground start feature shall not be programmed.

11.3 Programming the DS7400Xi

When used in UL Listed Requirements, the control must conform to certain programming requirements. The following is a list of the required program entries and required accessories for specific UL Listed Requirements.

11.3.1 Household Fire Alarm Using Digital Alarm Communicator Transmitter With Local Bell

The control must be installed in accordance with NFPA 72.

Required Accessories:

- At least one Detection Systems, Inc. Model DS250 Series smoke detector with an MB Series base, DS280 Series, MX280 Series, or another Listed compatible smoke detector.
- At least one DS7480 Bell Supervision Module.
- One Wheelock 46T-G10-12 bell or 34T-12 horn (will provide 85db for UL985 and NFPA 72 requirements; other Listed compatible devices with a voltage range of 10.2 to 14.0 V may be used) is required and must be installed inside the protected area.
- The standard control enclosure can be used.
- At least one DS7447/DS7447E or DS7445/DS7445i Keypad must be used.
- Four-wire detectors must be used with Listed power supervision devices. A compatible Listed 4-wire detector is the Detection Systems, Inc. DS250 in an MB4W base. A compatible Listed EOL relay is the Detection Systems, Inc. EOL200.
- All zones must be used with the EOL resistor (P/N 25899), provided.

1. Report Programming:

- Fire Zone Report must be programmed.
- Low Battery Report (Program Address 3336) must be programmed.
- AC Failure Report (Program Address 3338) must be programmed.

2. Timer Programming:

- Bell Cutoff Times (Program Addresses 4032 and 4033) must be programmed for not less than 4 minutes.

3. Zone Function Programming:

- For household fire installations only, the output signal may be pulsed or steady. For a combination system, see the selection below on alarm output programming.

4. Alarm Output Programming:

- Program Address 2734 must be programmed as: Data Digit 1= 6, Data Digit 2= 3.

5. General Control Programming:

- Program Address 2732 must be programmed as: Data Digit 1= 0, Data Digit 2= 0.

11.3.2 Grade A Household Burglary Alarm Using Digital Alarm Communicator Transmitter With Local Bell

The control must be installed in accordance with UL Standard UL1641.

Required Accessories:

- At least one Wheelock 46T-G10-12 bell or 34T-12 horn (other Listed compatible devices with a voltage range of 10.2 to 14.0 V may be used) is required for this application.
- The standard DS7400 enclosure can be used.

1. Report Programming:

- Burglar Zone Reports must be programmed for those zones used.
- Low Battery Report (Program Address 3336) must be programmed.
- AC Failure Report (Program Address 3338) must be programmed.

2. Timer Programming:

- Bell Cutoff Times (Program Addresses 4032 and 4033) must be programmed for not less than 4 minutes.
- Entry Delay Timer (Program Addresses 4028 and 4029) must be programmed for not longer than 60 seconds.
- Exit Delay Timer (Program Address 4030) must be programmed for not longer than 45 seconds.

3. General Control Programming:

- Program Address 0000, Data Digit 2 must be programmed for NO Swinger Shunts (enter 0, 1, or 2).
- Program Address 2732 must be programmed as: Data Digit 1= 0, Data Digit 2= 0.

4. Alarm Output Programming:

- Program Address 2734 must be programmed as: Data Digit 1= 6, Data Digit 2= 3.
- Program Address 2737 must be programmed as: Data Digit 1= 8.

NOTE In a system that includes both fire alarm and burglar alarm devices, the system must produce distinct sounds for fire and burglar alarm conditions either by using different indicating appliances or by using distinct cadences for the same appliance.

11.4 General System Requirements

Applies to the following grades only:

Local Burglary Alarm -	Grade A using Digital Alarm Communicator Transmitter (DACT)
Police Station Connection -	Grades AA and A using DACT and DS7416i Communications module. Grade A using DACT and local Bell.
Central Station Burglary Alarm -	Grades AA and A using DACT and DS7416i Communications module. Grade B using DACT and local bell. Grade C using Digital Alarm Communicator Transmitter only.

The controls must be installed in accordance with UL Standards UL681 and UL609 for all grades of service.

1. Report Programming:
- Burglar Zone Reports must be programmed for those zones used.
- Low Battery Report (Program Address 3336) must be programmed.
- AC Failure Report (Program Address 3338) must be programmed.
- Open Report (Program Address 3331) must be programmed.
- Close Report (Program Address 3332) must be programmed.
- 24-Hour Check-In Reports (Program Addresses 3340 and 3347) must be programmed.

2. General Control Programming:
- The control must not be programmed for auto disarm.
- Must be programmed for no swinger shunts and closing ringback. (Program Address 0000 data digit 2, enter 0, 1, or 2).
- Program Address 2732 must be programmed as: Data Digit 1= 0, Data Digit 2= 0.

3. Zone Function Programming:
- The Burglar alarm signal (whether pulsed or steady) must be different from the Fire alarm signal.

4. Alarm Output Programming:
- Program Address 2734 must be programmed as: Data Digit 1= 6, Data Digit 2 = 3.
- Program Address 2737 must be programmed as: Data Digit 1= 8.

11.4.1 Local Burglary Alarm

A. Grade A Installations using Digital Alarm Communicator Transmitter with local bell

Follow **General System Requirements** as listed in **11.4.**

Required Accessories:
- The control must be in the Detection System's model AE3CC enclosure with a cover actuated tamper switch installed.
- An Ademco Model AB-12 bell/housing (**see section 11.6**).

1. Timer Programming:
- Bell Cutoff Times (Program Addresses 4032 and 4033) must be programmed for not less than 15 minutes.
- Entry, Exit Delay Times (Program Addresses 4028-4029) must be programmed for not longer than 60 seconds.

11.4.2 Police Station Connection

Follow **General System Requirements** as listed in **11.4.**

Required Accessories:
- The control must be in the Detection Systems' model AE3CC enclosure with a cover actuated tamper switch installed.
- An DS7416i (or DataTAC) interface module.
- The DS7416i module and antenna should be mounted within the protected area.
- The Detection Systems' model DS7481 Phone Line Monitor.

1. Timer Programming:
- Entry, Exit Delay Times (Program Addresses 4028-4030) must be programmed for not longer than 60 seconds.

B. Grade A Installations Using Digital Alarm Communicator Transmitter With Local Bell
Follow **General System Requirements** as listed in **11.4.**

Required Accessories:
- The control must be in the Detection System's model AE3CC enclosure with a cover actuated tamper switch installed.
- The Ademco Model AB-12 bell/housing (**see section 11.6**).

1. Timer Programming:
- Bell Cutoff Times (Program Addresses 4032 and 4033) must be programmed for not less than 15 minutes.
- Entry, Exit Delay Times (Program Addresses 4028-4030) must be programmed for not longer than 60 seconds.

11.4.3 Central Station Burglary Alarm and Proprietary

A. Central Station Burglary Grades AA and A and Proprietary Grade AA Installations Using an DS7416i Interface Module
Follow **General System Requirements** as listed in **11.4.**

Required Accessories:
- The control must be in the Detection Systems' model AE3CC enclosure with a cover actuated tamper switch installed.
- An DS7416i (or DataTAC) interface module.
- The DS7416i module and antenna should be mounted within the protected area.
- The Detection Systems' model DS7481 Phone Line Monitor.
- The Ademco Model AB-12 bell/housing (**see section 11.6**).

1. Timer Programming:
- Entry, Exit Delay Times (Program Addresses 4028-4030) must be programmed for not longer than 60 seconds.

B. Grade B Installations Using Digital Alarm Communicator Transmitter With Local Bell
Follow **General System Requirements** as listed in **11.4.**

Required Accessories:
- The control must be in the Detection Systems' model AE3CC enclosure with a cover actuated tamper switch installed.
- The Ademco Model AB-12 bell/housing (**see section 11.6**).

1. Timer Programming:
- Bell Cutoff Times (Program Addresses 4032 and 4033) must be programmed for not less than 15 minutes.
- Entry, Exit Delay Times (Program Addresses 4028-4030) must be programmed for not longer than 60 seconds.

C. Central Station Burglary Grade C and Proprietary Grade A Installations Using Digital Alarm Communicator Transmitter only
Follow **General System Requirements** as listed in **11.4.**

Required Accessories:
- The control must be in the Detection System's model AE3CC enclosure with a cover actuated tamper switch installed.

1. Timer Programming:
- Entry, Exit Delay Times (Program Addresses 4028-4030) must be programmed for not longer than 60 seconds.

11.5 Commercial Fire Alarm

A. Central Station (DACT) and Local

The control must be installed in accordance with NFPA 72.

Required Accessories:

- DS7420i Dual Phone Line/Bell Supervision Module.
- For Local Commercial Fire Alarm: A Listed notification appliance such as a Wheelock 46T-G10-12 bell or 34T-12 horn.
- If not using the phone line supervision, it must be disabled.
- AE-TR16 Transformer Housing.
- At least one DS7447/DS7447E must be used and assigned as keypad 1. If only one is used, it may be connected to the keypad bus if the keypad is mounted to the front of the box or within the same room as the control equipment and the wire is run in conduit (or equivalently protected against mechanical injury) within 20 ft. (6.1 m) of the control equipment. If multiple keypads are used, one keypad only must be used on the options bus and assigned as keypad 11-14 and meet the same requirements as in single keypad use.
- 50 Hz. operation and ground start are automatically forced to the disabled state when central station fire mode is selected.

1. Report Programming:

- Burglar Zone Reports must be programmed for those zones used.
- Fire Zone Reports must be programmed for those zones used.
- Low Battery Report (Program Address 3336) must be programmed.
- AC Failure Report (Program Address 3338) must be programmed.
- Open Report (Program Address 3331) must be programmed.
- Close Report (Program Address 3332) must be programmed.
- 24-Hour Check-In Reports (Program Addresses 3340 and 3347) must be programmed.

2. Timer Programming:

- Bell Cutoff Times (Program Addresses 4032 and 4033) must be programmed for not less than 5 minutes.
- Entry, Exit Delay Times (Program Addresses 4028-4030) must be programmed for not longer than 60 seconds.

3. General Control Programming:

- Must be programmed for no swinger shunts (Program Address 0000 data digit 2, enter 0, 1, or 2).
- Program Address 2732 must be programmed as: Data Digit 1=0, Data Digit 2= 0.

4. Commercial Fire Mode Programming:

- Local (Program Address 2733, data digit 1, enter as a 1 through 6).
- Central Station (Program Address 2733, data digit 1, enter as a 7 through *2).
- The keypad panic functions are not intended to be a substitute for Listed manual pull boxes.

11.6 Wiring and Programming Information for Installations Using the Ademco AB-12 Bell/Housing

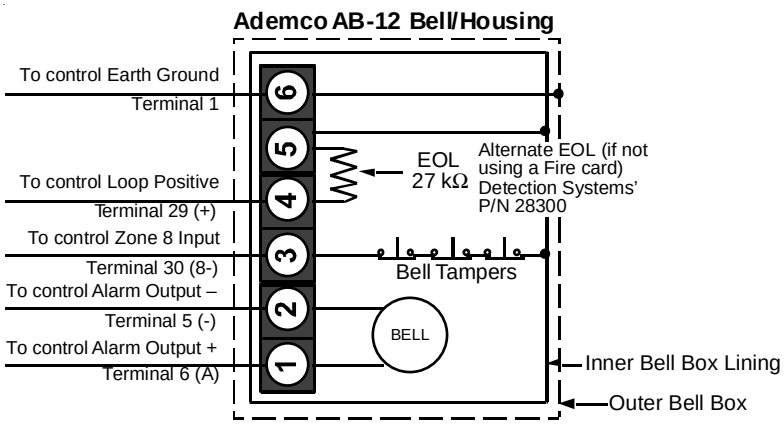

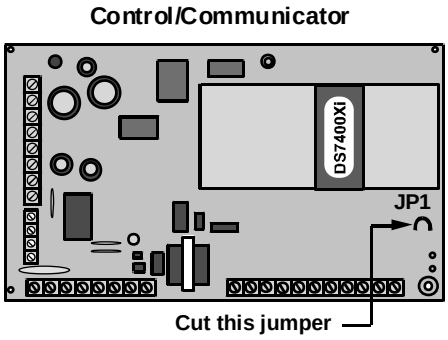

1) Disconnect the wire jumper from terminal 4 to the inner housing of the Bell Box (prevents a ground fault condition).
2) Connect wiring between the control and Bell Box as shown above. To use the AB-12 Bell/Housing, cut the jumper wire "JP1" on the control. The EOL used in the AB-12 Bell/Housing must be 27 kΩ.
3) Program Zone 8 as a 24-hour zone by programming it to follow zone function 7. (Program address 0038 = 07).
4) Do not change the default programming of zone function 7. (Program address 0007 should be 22).

12.0 Report Programming

12.1 4/2 Format

Suggested Values

Reports with Restorals

	Report			Restoral			Trouble			Trouble Restoral			Bypass			Bypass Restoral		
	Address	Value		Address	Value		Address	Value		Address	Value		Address	Value		Address	Value	
Zone Function 1	3209	A	1	3241	2	1	3271	6	1	3301	4	1	3358	8	1	3388	9	1
Zone Function 2	3210	A	2	3242	2	2	3272	6	2	3302	4	2	3359	8	2	3389	9	2
Zone Function 3	3211	A	3	3243	2	3	3273	6	3	3303	4	3	3360	8	3	3390	9	3
Zone Function 4	3212	A	4	3244	2	4	3274	6	4	3304	4	4	3361	8	4	3391	9	4
Zone Function 5	3213	A	5	3245	2	5	3275	6	5	3305	4	5	3362	8	5	3392	9	5
Zone Function 6	3214	A	6	3246	2	6	3276	6	6	3306	4	6	3363	8	6	3393	9	6
Zone Function 7	3215	A	7	3247	2	7	3277	6	7	3307	4	7	3364	8	7	3394	9	7
Zone Function 8	3216	A	8	3248	2	8	3278	6	8	3308	4	8	3365	8	8	3395	9	8
Zone Function 9	3217	A	9	3249	2	9	3279	6	9	3309	4	9	3366	8	9	3396	9	9
Zone Function 10	3218	A	A	3250	2	A	3280	6	A	3310	4	A	3367	8	A	3397	9	A
Zone Function 11	3219	A	B	3251	2	B	3281	6	B	3311	4	B	3368	8	B	3398	9	B
Zone Function 12	3220	A	C	3252	2	C	3282	6	C	3312	4	C	3369	8	C	3399	9	C
Zone Function 13	3221	A	D	3253	2	D	3283	6	D	3313	4	D	3370	8	D	3400	9	D
Zone Function 14	3222	A	E	3254	2	E	3284	6	E	3314	4	E	3371	8	E	3401	9	E
Zone Function 15	3223	A	F	3255	2	F	3285	6	F	3315	4	F	3372	8	F	3402	9	F
Zone Function 16	3224	A	F	3256	2	F	3286	6	F	3316	4	F	3373	8	F	3403	9	F
Zone Function 17	3225	A	F	3257	2	F	3287	6	F	3317	4	F	3374	8	F	3404	9	F
Zone Function 18	3226	A	F	3258	2	F	3288	6	F	3318	4	F	3375	8	F	3405	9	F
Zone Function 19	3227	A	F	3259	2	F	3289	6	F	3319	4	F	3376	8	F	3406	9	F
Zone Function 20	3228	A	F	3260	2	F	3290	6	F	3320	4	F	3377	8	F	3407	9	F
Zone Function 21	3229	A	F	3261	2	F	3291	6	F	3321	4	F	3378	8	F	3408	9	F
Zone Function 22	3230	A	F	3262	2	F	3292	6	F	3322	4	F	3379	8	F	3409	9	F
Zone Function 23	3231	A	F	3263	2	F	3293	6	F	3323	4	F	3380	8	F	3410	9	F
Zone Function 24	3232	A	F	3264	2	F	3294	6	F	3324	4	F	3381	8	F	3411	9	F
Zone Function 25	3233	A	F	3265	2	F	3295	6	F	3325	4	F	3382	8	F	3412	9	F
Zone Function 26	3234	A	F	3266	2	F	3296	6	F	3326	4	F	3383	8	F	3413	9	F
Zone Function 27	3235	A	F	3267	2	F	3297	6	F	3327	4	F	3384	8	F	3414	9	F
Zone Function 28	3236	A	F	3268	2	F	3298	6	F	3328	4	F	3385	8	F	3415	9	F
Zone Function 29	3237	A	F	3269	2	F	3299	6	F	3329	4	F	3386	8	F	3416	9	F
Zone Function 30	3238	A	F	3270	2	F	3300	6	F	3330	4	F	3387	8	F	3417	9	F

Reports with Restorals

	Report			Restoral		
	Address	Value		Address	Value	
Low Battery	3336	3	1	3337	7	1
AC Fail	3338	3	2	3339	7	2
System Trouble	3345	3	3	3346	7	3
Keypad Fire	3207	3	4	3208	7	4
System Walk Test	3350	3	5	3351	7	5
Fire Walk Test	3352	3	6	3353	7	6
Low Temperature	3354	3	7	3355	7	7
Dirty Smoke Chamber	3356	3	8	3357	7	8

Reports without Restorals

	Report		
	Address	Value	
Open	3331	5	1
Close	3332	5	2
Partial Close	3334	5	3
First Open after Alarm	3335	5	4
Exit Error	3348	5	5
Recent Closing	3349	5	6
Keypad Emergency	3239	5	7
Keypad Panic	3240	5	8
Duress	3333	5	9

	Report Successful			Report Unsuccessful		
	Address	Value		Address	Value	
Remote Program	3341	E	F	3342	F	F
Local Program	3343	E	F	3344	F	F

12.2 BFSK Format

Suggested Values

Reports with Restorals

	Report			Restoral			Trouble			Trouble Restoral			Bypass			Bypass Restoral		
	Address	Value		Address	Value		Address	Value		Address	Value		Address	Value		Address	Value	
Zone Function 1	3209	1	0	3241	E	1	3271	F	1	3301	E	1	3358	F	1	3388	E	1
Zone Function 2	3210	2	0	3242	E	2	3272	F	2	3302	E	2	3359	F	2	3389	E	2
Zone Function 3	3211	3	0	3243	E	3	3273	F	3	3303	E	3	3360	F	3	3390	E	3
Zone Function 4	3212	4	0	3244	E	4	3274	F	4	3304	E	4	3361	F	4	3391	E	4
Zone Function 5	3213	5	0	3245	E	5	3275	F	5	3305	E	5	3362	F	5	3392	E	5
Zone Function 6	3214	6	0	3246	E	6	3276	F	6	3306	E	6	3363	F	6	3393	E	6
Zone Function 7	3215	7	0	3247	E	7	3277	F	7	3307	E	7	3364	F	7	3394	E	7
Zone Function 8	3216	8	0	3248	E	8	3278	F	8	3308	E	8	3365	F	8	3395	E	8
Zone Function 9	3217	8	0	3249	E	8	3279	F	0	3309	E	8	3366	F	0	3396	E	8
Zone Function 10	3218	8	0	3250	E	8	3280	F	0	3310	E	8	3367	F	0	3397	E	8
Zone Function 11	3219	8	0	3251	E	8	3281	F	0	3311	E	8	3368	F	0	3398	E	8
Zone Function 12	3220	8	0	3252	E	8	3282	F	0	3312	E	8	3369	F	0	3399	E	8
Zone Function 13	3221	8	0	3253	E	8	3283	F	0	3313	E	8	3370	F	0	3400	E	8
Zone Function 14	3222	8	0	3254	E	8	3284	F	0	3314	E	8	3371	F	0	3401	E	8
Zone Function 15	3223	8	0	3255	E	8	3285	F	0	3315	E	8	3372	F	0	3402	E	8
Zone Function 16	3224	8	0	3256	E	8	3286	F	0	3316	E	8	3373	F	0	3403	E	8
Zone Function 17	3225	8	0	3257	E	8	3287	F	0	3317	E	8	3374	F	0	3404	E	8
Zone Function 18	3226	8	0	3258	E	8	3288	F	0	3318	E	8	3375	F	0	3405	E	8
Zone Function 19	3227	8	0	3259	E	8	3289	F	0	3319	E	8	3376	F	0	3406	E	8
Zone Function 20	3228	8	0	3260	E	8	3290	F	0	3320	E	8	3377	F	0	3407	E	8
Zone Function 21	3229	8	0	3261	E	8	3291	F	0	3321	E	8	3378	F	0	3408	E	8
Zone Function 22	3230	8	0	3262	E	8	3292	F	0	3322	E	8	3379	F	0	3409	E	8
Zone Function 23	3231	8	0	3263	E	8	3293	F	0	3323	E	8	3380	F	0	3410	E	8
Zone Function 24	3232	8	0	3264	E	8	3294	F	0	3324	E	8	3381	F	0	3411	E	8
Zone Function 25	3233	8	0	3265	E	8	3295	F	0	3325	E	8	3382	F	0	3412	E	8
Zone Function 26	3234	8	0	3266	E	8	3296	F	0	3326	E	8	3383	F	0	3413	E	8
Zone Function 27	3235	8	0	3267	E	8	3297	F	0	3327	E	8	3384	F	0	3414	E	8
Zone Function 28	3236	8	0	3268	E	8	3298	F	0	3328	E	8	3385	F	0	3415	E	8
Zone Function 29	3237	8	0	3269	E	8	3299	F	0	3329	E	8	3386	F	0	3416	E	8
Zone Function 30	3238	8	0	3270	E	8	3300	F	0	3330	E	8	3387	F	0	3417	E	8

Reports with Restorals

	Report			Restoral		
	Address	Value		Address	Value	
Low Battery	3336	F	9	3337	E	9
AC Fail	3338	F	A	3339	E	A
System Trouble	3345	F	D	3346	E	D
Keypad Fire	3207	1	0	3208	E	1
System Walk Test	3350	7	1	3351	7	2
Fire Walk Test	3352	7	3	3353	7	4
Low Temperature	3354	3	1	3355	3	2
Dirty Smoke Chamber	3356	3	3	3357	3	4

Reports without Restorals

	Report		
	Address	Value	
Open	3331	B	F
Close	3332	C	F
Partial Close	3334	C	F
First Open after Alarm	3335	D	F
Exit Error	3348	0	0
Recent Closing	3349	0	0
Keypad Emergency	3239	0	0
Keypad Panic	3240	9	0
Duress	3333	A	0

	Report Successful			Report Unsuccessful		
	Address	Value		Address	Value	
Remote Program	3341	0	0	3342	0	0
Local Program	3343	0	0	3344	0	0

12.3 Personal Dialing Format

This is a 2 pulse per second (PPS) 0/2 (no account code/2 report event digits) format intended for manual reception, i.e. the panel will call a phone number where a person is expected to answer. After a call is made, the panel will start sending the first report. If the report was a “Communication Test” and Program Address 3340 had a value of 12 the person answering the phone would hear 1 pulse followed by a 1 second delay, then 2 pulses followed by a 3 second delay. This sequence will repeat for 60 seconds per call. After the 60 seconds the panel will hang up and call again if any reports still remain to be sent.

A way to expedite this report process would be to provide an acknowledge to the panel that the report was heard and understood by the receiving party. When an acknowledge is provided, the panel will start sending the next report or hang up if no reports remain. To provide an acknowledge, press the 1 key of the telephone keypad during the 3 second delay of the report transmission. This “Acknowledge Feature” is an enhancement that will allow the panel to send all reports in one call. If the call is not acknowledged a communication failure is sent after all dial attempts are made.

Programming the first data digit as zero will disable the report. Values 1-9 and A-F are acceptable. A zero in the second data digit will send ten pulses.

12.4 Pager Format

The Pager format allows the control panel to dial a digital pager and leave a numeric message which includes an account ID and report type. The telephone number is dialed when a report is available. At the completion of the telephone dialing, a time delay equal to 10 seconds occurs. This delay allows time to connect with the pager service, while skipping over any voice announcement. When the delay has ended, the numeric message is sent. This message includes the account number followed by up to 5 reports. If a delay time greater than 10 seconds is required, see Programming Address 4038 to adjust the delay time. In addition, increments of 3 seconds can be added by programming the “*3” character (3 second delay) at the end of the phone number in address 3159 or 3175.

For example, if you call pager number 123-4567 and it takes 20 seconds after you finished dialing before you are allowed to enter the message, the following digits should be programmed in address 3159: 1 2 3 4 5 6 7 *3 *3 *3 *3. This will give you an overall delay of 22 seconds.

NOTE: For Pager Format, it is not advisable to use the HEX character values (*0 = A, *1 = B, *2 = C, *3 = D, *4 = E, *5 = F) in the report programming addresses 3207 through 3419. These characters could cause unpredictable results when sent to a pager system that only expects numeric characters between 0-9. This is the reason that this format will not allow an associated user number with an open and close report.

The following are recommended programming values for addresses 3207 through 3419 when using the Pager format.

NOTE: The Pager format is an open-loop format which has no acknowledge tone. There is no indication at the control panel that the signal has been sent. Therefore, the Pager format is not recommended as the primary communication method.

IMPORTANT

Refer to the worksheet on the next page for Reports with Restorals. The values for each report can be determined by the user in conjunction with the installer. Again, the digit “0” (zero) should **not** be used as the reporting (first) digit as it will affect other reports in the system. Examples have been provided for possible reporting values, but the values can be set to the user’s preferences.

Pager Format (Continued)

Suggested Values

Reports with Restorals

	Report			Restoral			Trouble			Trouble Restoral			Bypass			Bypass Restoral		
	Address	Value		Address	Value		Address	Value		Address	Value		Address	Value		Address	Value	
Zone Function 1	3209	1	1	3241	6	4	3271	3	1	3301	6	5	3358	6	1	3388	6	6
Zone Function 2	3210	1	2	3242	6	4	3272	3	2	3302	6	5	3359	6	1	3389	6	6
Zone Function 3	3211	1	3	3243	6	4	3273	3	3	3303	6	5	3360	6	1	3390	6	6
Zone Function 4	3212	1	4	3244	6	4	3274	3	4	3304	6	5	3361	6	1	3391	6	6
Zone Function 5	3213	1	5	3245	6	4	3275	3	5	3305	6	5	3362	6	1	3392	6	6
Zone Function 6	3214	1	6	3246	6	4	3276	3	6	3306	6	5	3363	6	1	3393	6	6
Zone Function 7	3215	1	7	3247	6	4	3277	3	7	3307	6	5	3364	6	1	3394	6	6
Zone Function 8	3216	1	8	3248	6	4	3278	3	8	3308	6	5	3365	6	1	3395	6	6
Zone Function 9	3217	1	9	3249	6	4	3279	3	9	3309	6	5	3366	6	1	3396	6	6
Zone Function 10	3218	2	0	3250	6	4	3280	4	0	3310	6	5	3367	6	2	3397	6	6
Zone Function 11	3219	2	1	3251	6	4	3281	4	1	3311	6	5	3368	6	2	3398	6	6
Zone Function 12	3220	2	2	3252	6	4	3282	4	2	3312	6	5	3369	6	2	3399	6	6
Zone Function 13	3221	2	3	3253	6	4	3283	4	3	3313	6	5	3370	6	2	3400	6	6
Zone Function 14	3222	2	4	3254	6	4	3284	4	4	3314	6	5	3371	6	2	3401	6	6
Zone Function 15	3223	2	5	3255	6	4	3285	4	5	3315	6	5	3372	6	2	3402	6	6
Zone Function 16	3224	2	6	3256	6	4	3286	4	6	3316	6	5	3373	6	2	3403	6	6
Zone Function 17	3225	2	7	3257	6	4	3287	4	7	3317	6	5	3374	6	2	3404	6	6
Zone Function 18	3226	2	8	3258	6	4	3288	4	8	3318	6	5	3375	6	2	3405	6	6
Zone Function 19	3227	2	9	3259	6	4	3289	4	9	3319	6	5	3376	6	2	3406	6	6
Zone Function 20	3228	3	0	3260	6	4	3290	5	0	3320	6	5	3377	6	2	3407	6	6
Zone Function 21	3229	3	0	3261	6	4	3291	5	1	3321	6	5	3378	6	3	3408	6	6
Zone Function 22	3230	3	0	3262	6	4	3292	5	2	3322	6	5	3379	6	3	3409	6	6
Zone Function 23	3231	3	0	3263	6	4	3293	5	3	3323	6	5	3380	6	3	3410	6	6
Zone Function 24	3232	3	0	3264	6	4	3294	5	4	3324	6	5	3381	6	3	3411	6	6
Zone Function 25	3233	3	0	3265	6	4	3295	5	5	3325	6	5	3382	6	3	3412	6	6
Zone Function 26	3234	3	0	3266	6	4	3296	5	6	3326	6	5	3383	6	3	3413	6	6
Zone Function 27	3235	3	0	3267	6	4	3297	5	7	3327	6	5	3384	6	3	3414	6	6
Zone Function 28	3236	3	0	3268	6	4	3298	5	8	3328	6	5	3385	6	3	3415	6	6
Zone Function 29	3237	3	0	3269	6	4	3299	5	9	3329	6	5	3386	6	3	3416	6	6
Zone Function 30	3238	3	0	3270	6	4	3300	6	0	3330	6	5	3387	6	3	3417	6	6

Reports with Restorals

	Report			Restoral		
	Address	Value		Address	Value	
Low Battery	3336	7	0	3337	8	0
AC Fail	3338	7	1	3339	8	1
System Trouble	3345	7	2	3346	8	2
Keypad Fire	3207	7	3	3208	8	3
System Walk Test	3350	7	4	3351	8	4
Fire Walk Test	3352	7	5	3353	8	5
Low Temperature	3354	7	6	3355	8	6
Dirty Smoke Chamber	3356	7	7	3357	8	7

Reports without Restorals

	Report		
	Address	Value	
Open	3331	9	0
Close	3332	9	1
Partial Close	3334	9	2
First Open after Alarm	3335	9	3
Exit Error	3348	6	7
Recent Closing	3349	9	4
Keypad Emergency	3239	9	5
Keypad Panic	3240	9	6
Duress	3333	9	7

	Report Successful			Report Unsuccessful		
	Address	Value		Address	Value	
Remote Program	3341	8	8	3342	7	8
Local Program	3343	8	9	3344	7	9

13.0 Report Programming - Values Sent

13.1 SIA Formats

Data Digit 2 value	SIA Report	Explanation
1	PA	Panic Alarm
2	PR	Panic Restore
3	QA	Emergency Alarm
4	QR	Emergency Restore
5	TA	Tamper Alarm
6	TR	Tamper Restore
7	UA	Untyped Zone Alarm
8	UR	Untyped Zone Restore
9	UT	Untyped Zone Trouble
*0	UJ	Untyped Trouble Restore
*1	YP	Power Supply Trouble
*2	YQ	Power Supply Restore
*3	YX	Service Required

Reports	SIA event code		SIA data field
Burglary alarm for a zone	B	A	Zone Number
Fire alarm for a zone	F	A	Zone Number
Waterflow alarm for a zone	S	A	Zone Number
Supervisory for a zone	S	S	Zone Number
Keypad fire (A)	F	A	000
Keypad fire restoral (A)	F	R	000
Keypad emergency (B)	Q	A	None
Keypad panic (C)	P	A	None
Burglary restoral for a zone	B	R	Zone Number
Fire restoral for a zone	F	R	Zone Number
Waterflow restoral for a zone	S	R	Zone Number
Supervisory restoral for a zone	S	J	Zone Number
Burglary trouble for a zone	B	T	Zone Number
Burglary trouble restoral	B	J	Zone Number
Fire trouble for a zone	F	T	Zone Number
Fire trouble restoral	F	J	Zone Number
Waterflow trouble for a zone	F	T	Zone Number
Supervisory trouble for a zone	F	T	Zone Number
Burglary Zone Bypass	B	B	Zone Number
Burglary Zone Bypass restoral	B	U	Zone Number
24 Hour Zone Bypass	B	B	Zone Number
24 Hour Zone Bypass restoral	B	U	Zone Number
Keypad Tamper	E	X	None
Keypad Tamper restoral	E	R	None
Tamper RF zone	T	T	Zone Number
Tamper, Alarm RF zone	B	A	Zone Number
Tamper restoral RF zone	B	R	Zone Number
Low Battery RF zone	X	T	Zone Number
Low Battery restoral RF zone	B	R	Zone Number
Open report	O	P	User Number
Close report	C	L	User Number
Duress report	H	A	000
Partial close report	C	G	User Number
First open after alarm (cancel) report	O	R	None
Low battery	Y	T	None
Low battery restoral	Y	R	None
AC failure	A	T	None
AC failure restoral	A	R	None
Octal relay fault report	E	T	None
Octal relay restoral	E	R	None
Exit error report	E	E	None
Recent closing report	C	R	None
System walk test start report	T	S	None
System walk test end report	T	E	None

13.1 SIA Formats (Continued)

Reports	SIA event code		SIA data field
Fire walk test report	F	I	None
Fire walk test restoral	F	K	None
Dirty Smoke Chamber report	M	C	Zone Number
Dirty Smoke Chamber restoral	M	O	Zone Number
Mux. Smoke low temperature report	M	F	Zone Number
Mux. Smoke low temperature restoral	M	R	Zone Number
Automatic system normal test report	R	P	None
Manual communicator test report	R	X	None
Remote programming successful report	R	S	None
Remote programming failure report	R	U	None
Local programming successful report	Y	G	None
Local programming failure report	Y	F	None
Communication failure report	Y	C	None
Communication restoral	Y	K	None
EEPROM checksum failure or keypad supervision failure report	E	T	None
EEPROM checksum restoral or keypad supervision restoral	E	R	None
Multiplex bus fault	E	T	None
Multiplex bus restoral	E	R	None
Radio receiver tamper	X	S	Receiver Number
Radio receiver tamper restoral	X	J	Receiver Number
Radio receiver jammed	X	Q	Receiver Number
Radio receiver jammed restoral	X	H	Receiver Number
Radio receiver trouble report	X	Q	Receiver Number
Radio receiver trouble restoral	X	H	Receiver Number
RF Zone Missing	T	T	Receiver Number
Aux. power fault report	Y	P	None
Aux. power restoral	Y	Q	None
Ground fault report	U	T	None
Ground fault restoral	U	J	None
Automatic system off normal test report	R	P	None
Phone line 1 fault report	L	T	None
Phone line 1 restoral	L	R	None
Phone line 2 fault report	L	T	None
Phone line 2 restoral	L	R	None
DS7416i fault report	Y	S	See 8.13.6 Error Displays
DS7416i fault restoral	Y	K	See 8.13.6 Error Displays
Bell fault report	E	T	None
Bell fault restoral	E	R	None
RAM fault report	E	T	None
RAM fault restoral	E	R	None
ROM fault report	E	T	None
ROM fault restoral	E	R	None
Serial interface fault report	V	T	None
Serial interface restoral	V	R	None
Aux. relay fault report	E	T	None
Aux. relay restoral	E	R	None

13.2 CID Formats

Reports	CID event code	CID data field
Fire alarm for a zone	110	Zone Number
Fire restoral for a zone	110 Restoral	Zone Number
Keypad fire (A)	110	000
Keypad fire restoral (A)	110 Restoral	000
Waterflow alarm for a zone	113	Zone Number
Waterflow restoral for a zone	113 Restoral	Zone Number
Duress report	121	000
Keypad emergency (B)	122	None
Keypad panic (C)	123	None
Burglary alarm for a zone	130	Zone Number
Burglary restoral for a zone	130 Restoral	Zone Number
Tamper, Alarm RF zone	130	Zone Number
Low Battery restoral RF zone	130 Restoral	Zone Number
Mux. Smoke low temperature report	159	Zone Number
Mux Smoke low temperature restoral	159 Restoral	Zone Number
Supervisory for a zone	200	Zone Number
Supervisory restoral for a zone	200 Restoral	Zone Number
Aux. power fault report	300	None
Aux. power restoral	300 Restoral	None
AC failure	301	None
AC failure restoral	301 Restoral	None
Low battery	302	None
Low battery restoral	302 Restoral	None
RAM fault report	303	None
RAM restoral	303 Restoral	None
ROM fault report	304	None
ROM restoral	304 Restoral	None
Local programming successful report	306	None
Local programming failure report	306 Restoral	None
Ground fault report	310	None
Ground fault restoral	310 Restoral	None
Aux. relay fault report	320	004
Aux. relay restoral	320 Restoral	004
Bell fault report	321	003
Bell restoral	321 Restoral	003
Octal relay fault report	330	005
Octal relay restoral	330 Restoral	005
Keypad supervision failure report	330	None
Keypad supervision restoral	330 Restoral	None
Multiplex bus fault	333	None
Multiplex bus restoral	333 Restoral	None
Radio receiver trouble report	333	Receiver Number
Radio receiver trouble restoral	333 Restoral	Receiver Number
Serial interface fault report	336	None
Serial interface restoral	336 Restoral	None

Reports	CID event code	CID data field
Keypad Tamper	341	None
Keypad Tamper restoral	341 Restoral	None
Radio receiver tamper	341	Receiver Number
Radio receiver tamper restoral	341 Restoral	Receiver Number
Radio receiver jammed	344	Receiver Number
Radio receiver jammed restoral	344 Restoral	Receiver Number
Phone line 1 fault report	351	None
Phone line 1 restoral	351 Restoral	None
Phone line 2 fault report	352	None
Phone line 2 restoral	352 Restoral	None
DS7416i fault report*	353	See 15.4 Gen Sys Prob
DS7416i fault restoral*	353 Restoral	See 15.4 Gen Sys Prob
Communication failure report	354	None
Communication restoral	354 Restoral	None
Tamper restoral RF zone	370 Restoral	Zone Number
Burglary trouble for a zone	370	Zone Number
Burglary trouble restoral	370 Restoral	Zone Number
Fire trouble for a zone	373	Zone Number
Fire trouble restoral	373 Restoral	Zone Number
Waterflow trouble for a zone	373	Zone Number
Supervisory trouble for a zone	373	Zone Number
RF Zone Missing	381	Zone Number
Tamper RF zone	383	Zone Number
Low Battery RF zone	384	Zone Number
Dirty Smoke Chamber report	385	Zone Number
Dirty Smoke Chamber restoral	385 Restoral	Zone Number
Open report	401	User Number
Close report	401 Restoral	User Number
Recent closing report	405	None
First open after alarm (cancel) report	406	None
Remote programming successful report	412	None
Remote programming failure report	413	None
Partial close report	456 Restoral	User Number
Exit error report	457	None
Burglary Zone Bypass	573	Zone Number
Burglary Zone Bypass restoral	573 Restoral	Zone Number
24 Hour Zone Bypass	573	Zone Number
24 Hour Zone Bypass restoral	573 Restoral	Zone Number
Manual communicator test report	601	None
Automatic system normal test report	602	None
Automatic system off normal test report	602	None
Fire walk test report	604	None
Fire walk test restoral	604 Restoral	None
System walk test start report	607	None
System walk test end report	607 Restoral	None

*The 2-digit #89 display System Fault numbers will be sent in the CID data field for DS7416i fault reports.

14.0 Multiplex Zone Addressing Guide

Before installing a multiplex device, its address and other information must be programmed into the control panel. (To disable or remove a multiplex point, set the program address for 00 [see Section 10.4]).

IMPORTANT

If using a DS7436 Multiplex Expansion Module, programming **must** be done using bus "A."

Perform the following:

- Program the control panel.
  - Refer to sections 10.2-10.5, Zone Programming.
    These sections allow you to define the Multiplex Zone's address (zone number), its type (single or multiple zone input device, a DS7465, a Multiplex Smoke or a Multiplex Smoke with a Low Temperature Alarm), which zone or output function it will follow (1-24) and its partition (1-8).

    For example: Program zone 9 to be a single zone input device (MX950) that follows zone function 1 and is in partition 1.

    Procedure: Enter the programmer's mode.
    Enter address 0039.
    Enter the data digits as [0] and [1] followed by the [#] button.
    Enter address 0291.
    Enter the data digits as [0] and [0] followed by the [#] button.
    Exit the programmer's mode.

- Program the BusLoc® feature.
  At this point, you must decide whether or not to use the BusLoc® feature.
  BusLoc® is a proprietary method of tying the multiplex zones to the control panel to prevent the system from being taken over. Using BusLoc® will program an invisible identification code into the multiplex zones.

NOTE: If using the DS7432 8-Input Remote Module or the DS7433 8-Input Direct Module, the BusLoc® feature can not be used.

  - If you choose to use the BusLoc® feature, program a 5-digit code at programming address 9999.
    It is very important to save this code under lock and key. If you need to replace the control panel, you will have to program it with the same BusLoc® code as the previous panel or the multiplex devices will not match codes with the new control panel.

    For example: Program the BusLoc® code to be 54321.

    Procedure: Enter the programmer's mode.
    Enter address 9999.
    Enter the data digits as [5], [4], [3], [2], and [1] followed by the [#] button.
    Exit the programmer's mode.

Once the pre-programming is done, you are ready to program the multiplex devices. Perform the following:

- Disconnect all multiplex devices from the DS7430.
- Program the multiplex devices through the control panel. Perform the following:
  - Enter the programmer's mode.
  - Enter the multiplex programming mode.
    Do this by entering [9] [9] [9] [5] followed by the [#] button.
  - The control will then take a few seconds to check the multiplex connection to confirm nothing is connected to it. The display will show the following:

```
Checking
Multiplex Bus
```

  - The display will then call-up the first zone you have pre-programmed to be a multiplex zone. To access a different zone, press the [Reset/*] key, then enter the three digit value of the zone you want. The display will show the following:

```
Sens/Contact 009
Press # to Prog
```

Before you do anything else, reconnect the multiplex device (that coincides with the displayed zone) to the multiplex bus of the DS7430.

For DS7465s and Multiple Input devices, pressing the [#] button now will program these devices to the control panel. Remember, these devices take up two addresses. When address 009 (for example) is a DS7465, pressing the [#] button now will program both addresses 009 and 010.

For Single Input devices, press the [#] button to continue programming. The display asks whether you are programming a sensor or a contact; it will show the following:

```
Sensor? Press 4
Contact? Press 6
```

If you are programming a sensor, press the [4] button to program these devices to the control panel. If you are programming a contact, press the [6] button to program these devices to the control panel.

  - If the device is successfully programmed, the keypad will sound a single beep and increment to the next zone (if there is one) pre-programmed as a multiplex zone.

IMPORTANT

Disconnect the device you just programmed and connect the next device (that belongs to the displayed zone) to the multiplex bus of the DS7430 and press the [#] button. Continue programming.

CAUTION

24-hour zones will alarm when you exit the programmer's mode. Alarm reports for these zones will be sent if they have been programmed. If you do not want these reports sent, disconnect power from the system now by unplugging the transformer and removing the red battery lead. Do not reconnect power until all zones have been installed and connected to the multiplex bus.

  - If no other zones have been pre-programmed, the display will show the following:

```
Mux Zone
Enter Zone
```

  - You may now exit the Zone Programmer's mode by pressing the [*/Reset] button for 2 seconds. This brings you back to the Programmer's Mode. To exit the Programmer's Mode, press the [*/Reset] button for 2 seconds.
  - If the zone is unsuccessfully programmed, the keypad will sound a three-beep error tone.

15.0 Troubleshooting Guide

15.1 Keypad Problems

Symptom	Probable Cause	Possible Solution
Entry Error: **Please Re-enter** will display on keypad. A three beep error tone will sound continuously.	a) Two or more keypads share the same address. b) The DS7430 or DS7433 is installed in the wrong pins.	a) Install keypad jumper properly in back of keypads. b) Be sure the DS7430 or DS7433 is installed properly.
Keypad displays **Not Programmed, See Instal Guide**, sounder is on and the keypad does not operate.	a) The keypad not addressed properly. b) The keypad is not programmed properly. c) Keypads 11-15 are not properly configured.	a) Install the keypad jumper properly in the back of the keypad. b) Check keypad programming addresses 3131-3138. c) Check keypad addresses 11-15. System will only see keypads on the options bus.
Keypad displays **Ready to arm, partition 1** when using only one partition. Keypad displays **System Fault**, sounder is on, and the keypad does not operate.	The keypad is programmed as a Master keypad. a) Keypad wiring error. b) Keypad(s) assigned to wrong or non-existent partition. c) The microprocessor isn't running.	Master keypads can only be used on multi-partition systems. Program the keypad as a standard keypad. a) Check wiring. b) Assign the keypad(s) to correct partition. If none of the keypads are correctly assigned, re-enable keypad 1 by shorting the program contacts in the lower right corner of the main panel board. This will force program mode and assign keypad 1 as alpha, non-master to partition 1. c) Disconnect battery and any aux. power load. If the microprocessor has shut down, aux. power will read approx. 11.5 VDC. If the EEProm chip has been field-replaced, power down AC and battery, and check for bent or mis-inserted pins; Otherwise, replace the panel.
Keypad alpha display is locked up, but the keys still function.	The keypad is enabled, but as an LED keypad.	Enter the program mode at the keypad and input the correct sequence to re-enable it as an alpha keypad. Care must be taken, since there will be no visual feedback to verify programming until the keypad is properly enabled.
Can't read back history with # 89 input.	a) Entering from Master keypad. b) Not using a PIN with test authority.	a) First enter Single Partition Mode. b) Use a PIN with test authority.
In history, the Read-back for the A, B, and C keys shows: A = Fire B = Emergency C = Panic But, the Central Station transmissions display B as Silent Panic and C as Audible Panic.	Formats display information regarding the B and C keys differently. In Contact ID: A = Fire B = Silent Panic C = Audible Panic In SIA: A = Fire B = Emergency C = Panic	Discrepancy exists in the definition of these keys in the two formats. Whatever the keys are programmed for in the panel, that is what will be sent.
Can not perform a zone test (#81).	a) Entering from a Master keypad. b) Not using a PIN with test authority.	a) Zone test is not available from a Master keypad. b) Use a PIN with test authority.

Keypad Problems (Continued)

Symptom	Probable Cause	Possible Solution
Chime Mode (#7) does not work when a zone is faulted.	a) Not activating for interior zones. b) The keypad is not assigned to the same partition as the zone being activated.	a) Chime mode only activates for perimeter zones - Chime mode must be programmed. Also, if the perimeter zone has trouble enabled (trouble on open), the chime won't work if that zone is opening. b) Chime mode will only activate the sounder on keypads that are assigned to the same partition as the zone.
Some functions won't work on a Master keypad.	Some functions require you to enter single partition mode when using a Master keypad.	The following commands require that you are in Single Partition Mode when entering from a Master keypad: • History read-back • Chime mode • Checking zone status • Checking zone trouble status (after #87 - Master keypad will show only partition name) • Bypassing zones

15.2 Reporting Problems

Symptom	Probable Cause	Possible Solution
Won't send open or close reports.	Not programmed correctly.	Check addresses: 3331, 3332, 3334, and 3333.
Reports for partitions 2-8 are being sent with partition 1's reporting ID.	The account codes for 2-8 are not programmed or are not programmed correctly.	Check addresses: 3429-3459.
Not getting AC power fail reports.	a) AC power fail messages are sent only with other reports, such as low battery. b) Check AC report offset (3338). If 00, AC report will work like above, if another number, AC report will be delayed.	a) Try forcing another report to send when AC is not present. b) Wait until the delay times out or set to a lower number if desired.
Panel never transmits history to WDSRP.	a) Not programmed to send history. b) Time and date not set.	a) Check programming. b) Verify that the time in the panel is set.
The communicator test report is not being sent.	a) Report not programmed properly. b) There was a control problem at the time the report should have been sent. If this is the case, the communicator test report will not be sent. Instead, the control will send the "System Off Normal" report.	a) Check programming addresses 4022, 4023, 4026, and 3340. b) Program "System Off Normal" report in address 3347.

15.3 Zone Problems

Symptom	Probable Cause	Possible Solution
Fire Alarm displays on keypad but no zone numbers are displayed.	In Commercial Fire Mode, fire alarms must be silenced before the zone number will display.	Enter a valid disarm PIN and press #, then enter a valid disarm PIN and press # again to display the zones.
Every other zone displays **Not Ready.**	Zone Programming is incorrect.	Program as a multiple zone input for DS7432 or DS7460, a single zone input for contacts and sensors, or program as a DS7465.

Zone Problems (Continued)

Symptom	Probable Cause	Possible Solution
Zones 9 and above show **Not Ready, Zone Trouble.** IMPORTANT Never disconnect the power when in the programming mode. Always disconnect the Multiplex Bus or have the DS7430 or DS7436 in the disable programming mode when powering up or down.	a) The multiplex expansion module is not installed properly.	a) Make sure the multiplex expansion module is seated properly in the upper pins on the DS7400Xi circuit board.
	b) Multiplex wiring is missing or is not installed properly.	b) Check wiring and perform a system reset.
	c) 8-Input remote module DIP switches are not set properly.	c) Correctly set the DIP switches for the 8-Input remote modules.
	d) 8-Input remote module covers are removed.	d) Replace covers or install the tamper bypass jumper.
	e) The BusLoc® code is set incorrectly or has not been programmed into modules.	e) BusLoc® can not be used with 8-Input remote modules. If using 8-Input modules, remove the BusLoc® code. **OR** If using two-input remote modules or the DS7465, be sure to use BusLoc® when programming. If not using BusLoc®, be sure to remove the BusLoc® code from address 9999.
	f) Zone Programming is incorrect.	f) Program as a multiple zone input for DS7432 or DS7460, a single zone input for contacts and sensors, or program as a DS7465.
	g) Multiplex module not programmed.	g) Program the module.
	h) Multiplex Bus voltage is 12VDC or greater. (Normal is approximately 8 to 10VDC.)	h) Two modules are programmed with the same address. The problem will only occur when both modulees are off normal. Isolate the duplicate module by disconnecting sections of the bus and performing a [PIN] + [System Reset]. Reprogram modules. **OR** The system is in the programming mode. Exit the programming mode. **OR** Zones have been added to a system protected by Busloc®. Clear Busloc®.
	i) Multiplex Bus voltage is 5VDC or less.	i) There is a short on the multiplex bus. **OR** There is a bad module on the bus. **OR** One or more modules on the bus are connected backwards - reverse polarity.
Invisible or silent zone activates alarm output.	(Normal is approximately 8 to 10VDC.) The output is programmed as “latch on alarm” (0).	Program the output to follow zone alarms (6).
Keypad displays **Fire Trouble**, but does not indicate any zones.	A ground fault condition exists.	See system trouble: Ground fault.
Keypad displays **Not Ready,** but no zone number is displayed.	An invisible zone is not ready.	Press [PIN] + [OFF] to display the zone number of the invisible zone that is not ready.

15.4 General System Problems

Symptom	Probable Cause	Possible Solution
How to set the programming values to the factory default.	Enter a value of 01 in address 4058.	**Caution:** Only enter a value of 01 in address 4058 when you are sure you want to default the programming. Doing so will immediately erase all programming.

General System Problems (Continued)

Symptom	Probable Cause	Possible Solution
Power LED is flashing, keypad displays **Control Trouble Press #87.**	A control trouble exists.	Press #87 to determine the trouble condition.
#87 display = **Oct. Relay Fault** #89 display = **System Fault 20**	a) The octal relay module (DS7488) is defective or the wiring to the module is defective. b) There is no DS7488 or a DS7488 has been removed from the system.	a) Check the wiring to the module. b) Enter, then exit programming mode. This will re-scan the options bus and clear the problem.
#87 display = **Multiplex Bus Fault**	The Multiplex Bus is defective or shorted.	Check wiring for shorts.
Can't reset to factory default.	Keypad programming access is set to PARTIAL from Remote programmer.	Change setting to FULL from the Remote programmer.
#87 display = **RAM Fault** #89 display = **System Fault 01** or #87 display = **ROM Fault** #89 display = **System Fault 02** or #87 display = **EEProm Fault** #89 display = **System Fault 03**		a) An EEProm fault can be caused by disconnecting power from the control while it is in program mode. In this case, enter then exit program mode to clear. b) Try to clear the error at the keypad by entering a PIN then Reset. c) Remove AC and battery power, then re-apply. Remember that event history will be lost and time/date will have to be re-set. d) If error persists, return the panel to factory default programming by setting program address 4058 to "01". If the error clears, re-program the panel. e) If error still persists, replace the panel.
#87 display = **Communicator Err** #89 display = **Report Failure X**	The control has failed to communicate.	Check history #89 to determine the source: Report Failure 1 = Phone number 1 Report Failure 2 = Phone number 2 Report Failure 3 = Phone number 3 (remote programmer) Report Failure 4 = DS7416i Communications fault
#87 display = **2Ph/Bell Fault** #89 display = **System Fault 10**	a) The dual phone line/bell supervision module (DS7420i) is defective or the wiring to the module is defective. b) There is no DS7420i or a DS7420i has been removed from the system.	a) Check the wiring to the module. b) Enter, then exit programming mode. This will re-scan the options bus and clear the problem.
#87 display = **Line 1 Fault** #89 display = **System Fault 11**	There is a phone line fault on line 1.	Check phone line 1 for proper operation.
#87 display = **Line 2 Fault** #89 display = **System Fault 12**		Check phone line 2 for proper operation. If you wish to monitor only one phone line, reprogram address 4021.
#87 display = **Bell Fault** #89 display = **System Fault 13**	There is a phone line fault on line 2.	Check the bell circuit wiring. Be sure that the end-of-line resistor is in place. If you don't wish to use the bell circuit, place an end-of-line resistor across the bell terminals.
#87 display = **Aux. Output Fault** #89 display = **System Fault 14**	The bell circuit on the DS7420i is open or shorted. The auxiliary circuit on the DS7420i is open or shorted.	Check the auxiliary circuit wiring. Be sure that the end-of-line resistor is in place. If you don't wish to use the auxiliary circuit, place an end-of-line resistor across the auxiliary terminals. If you wish to use the auxiliary circuit but do not wish to supervise it, cut the auxiliary supervision jumper on the DS7420i.

General System Problems (Continued)

Symptom	Probable Cause	Possible Solution
#87 display = **Aux Power Fault**	The auxiliary power output has been shorted.	Remove wiring from auxiliary power and check for shorts.
#87 display = **Keypad Fault**	a) The keypad wiring is defective. b) A keypad is missing. c) A keypad has been programmed, but is not intended in this system.	a) Check keypad operation and wiring. b) Install a keypad. c) Remove from programming (3131-3138).
#87 display = **Ground Fault** #89 display = **System Fault 04**	There is a short to ground somewhere in the system.	Disconnect field wiring from each terminal while watching the keypad display. When the keypad power LED stops flashing, you have found the wire that is causing the ground fault. **Note:** The LED will not stop flashing if there is another system fault present. If there is no keypad nearby, or another control problem exists, you can use a volt-meter to find the ground fault: 1) Connect the negative lead of a volt-meter to the panel ground terminal. 2) Connect the positive terminal to the Aux Power – terminal. You should read -4.5 to -7.5 Volts DC. A reading considerably higher or lower indicates a ground fault. Disconnect field wiring from each terminal while watching the meter. When the voltage reading returns to between -4.5 and -7.5 VDC, you have found the wire that is causing the ground fault.
#87 display = **AR IB Queue Full** #89 display = **System Fault 51**	The message queue in the RF modem is full and no messages can get out to the radio network.	Check RF coverage of the unit and check for RF noisy environment.
#87 display = **AR Host Down** #89 display = **System Fault 52**	The central station receiver has ceased to be available to the network.	Contract the central station and notify of status.
#87 display = **AR Unreg. Modem** #89 display = **System Fault 53**	The modem is not registered through all parts of the network.	Contact the network administrators or technical service.
#87 display = **AR Power Fail** #89 display = **System Fault 54**	There is a possible problem with the DS7416i Module.	Return for service.
#87 display = **AR Network Lost** #89 display = **System Fault 55**	The DS7416i Module has lost contact with the radio network.	Check the location and coverage of the unit.
#87 display = **AR Modem HW Err** #89 display = **System Fault 56**	There is a possible problem with the radio modem.	Replace the unit.
#87 display = **AR Modem SW Err** #89 display = **System Fault 57**	The DS7416i Module is having trouble communicating with the radio modem.	Check for noisy environment and replace the unit if the problem continues.
#87 display = **AR Opt. Bus Err** #89 display = **System Fault 58**	The panel can no longer communicate with the DS7416i Module.	Check the wiring between the DS7400Xi and the DS7416i Module.
#87 display = **AR Corrupt MSG** #89 display = **System Fault 59**	The communication between the panel and the DS7416i Module is getting corrupted.	Check for noisy environment, and check the wiring between the DS7400Xi and the DS7416i Module.
Unable to arm the system.	a) Zone(s) faulted. b) If an AC failure exists, you must force arm.	a) Determine the cause of the problem and clear the indicated zone(s). b) Enter an arming sequence, then press the Bypass key during a 5 second beep.

General System Problems (Continued)

Symptom	Probable Cause	Possible Solution
#87 display = **Battery Trouble**	a) The battery failed a battery test. b) The battery is defective. c) The wiring to the battery is disconnected.	a) If there has just been a power failure, wait at least two hours for the battery to recharge then perform a System Reset to re-test the battery and clear the error. b) Replace the battery. c) Check wiring.
#87 display = **Zone Trouble**	a) A zone is not responding to the control panel. b) The zone is programmed for "Trouble on Open" and the loop is open. There is a power failure and the panel is operating on battery backup. If there is a general power failure, wait for the power to return. If there is not a general power failure in the building.	a) Check wiring to the zone. **or** If the zone is not to be used, remove from programming. b) If using Normally Closed contacts, re-program zone for alarm on open. **or** If using Normally Open contacts and trouble on open is desired, check for opens in the loop. Remove wiring and place an EOL resistor across the zone to eliminate a problem with the control. If the trouble goes away, the problem is in the wiring or in a contact connected to the zone.
#87 display = **AC Power Failure**	a) The transformer is unplugged. b) The wiring from the transformer is defective. c) The circuit to the transformer is off or defective. d) The transformer is defective. e) In some cases, the transformer may be connected to a circuit controlled by a switch or a circuit breaker that is periodically turned off.	a) Plug the transformer in. b) Check the wiring. c) Check the circuit and circuit breakers. d) Replace the transformer. e) Connect to a circuit that is not controlled this way.
Fire Alarm displays "000".	The Fire Alarm was caused by the "A" key.	Use the System Reset command to clear the display.
Fire Trouble, no zone number.	When in Commercial Fire Mode, a ground fault causes this display.	See #87 Ground Fault display for solution.
Fire Trouble _____ zone number. Dirty	Fire zone wiring problems.	If you try to disable the zone by reprogramming it, you need to reset the control by either entering then exiting programmer's mode, or removing then restoring power to the control panel.
Chamber _____ zone number.	A multiplex smoke detector has failed its internal sensitivity test.	Clean or replace the dirty smoke detector or chamber. DO NOT USE WATER TO CLEAN THE CHAMBER.

16.0 Program Addresses

Address	Description	Address	Description	Address	Description
0000	General Control	0063	Zone Number 33	0126	Zone Number 96
0001	Zone Function 1	0064	Zone Number 34	0127	Zone Number 97
0002	Zone Function 2	0065	Zone Number 35	0128	Zone Number 98
0003	Zone Function 3	0066	Zone Number 36	0129	Zone Number 99
0004	Zone Function 4	0067	Zone Number 37	0130	Zone Number 100
0005	Zone Function 5	0068	Zone Number 38	0131	Zone Number 101
0006	Zone Function 6	0069	Zone Number 39	0132	Zone Number 102
0007	Zone Function 7	0070	Zone Number 40	0133	Zone Number 103
0008	Zone Function 8	0071	Zone Number 41	0134	Zone Number 104
0009	Zone Function 9	0072	Zone Number 42	0135	Zone Number 105
0010	Zone Function 10	0073	Zone Number 43	0136	Zone Number 106
0011	Zone Function 11	0074	Zone Number 44	0137	Zone Number 107
0012	Zone Function 12	0075	Zone Number 45	0138	Zone Number 108
0013	Zone Function 13	0076	Zone Number 46	0139	Zone Number 109
0014	Zone Function 14	0077	Zone Number 47	0140	Zone Number 110
0015	Zone Function 15	0078	Zone Number 48	0141	Zone Number 111
0016	Zone Function 16	0079	Zone Number 49	0142	Zone Number 112
0017	Zone Function 17	0080	Zone Number 50	0143	Zone Number 113
0018	Zone Function 18	0081	Zone Number 51	0144	Zone Number 114
0019	Zone Function 19	0082	Zone Number 52	0145	Zone Number 115
0020	Zone Function 20	0083	Zone Number 53	0146	Zone Number 116
0021	Zone Function 21	0084	Zone Number 54	0147	Zone Number 117
0022	Zone Function 22	0085	Zone Number 55	0148	Zone Number 118
0023	Zone Function 23	0086	Zone Number 56	0149	Zone Number 119
0024	Zone Function 24	0087	Zone Number 57	0150	Zone Number 120
0025	Zone Function 25	0088	Zone Number 58	0151	Zone Number 121
0026	Zone Function 26	0089	Zone Number 59	0152	Zone Number 122
0027	Zone Function 27	0090	Zone Number 60	0153	Zone Number 123
0028	Zone Function 28	0091	Zone Number 61	0154	Zone Number 124
0029	Zone Function 29	0092	Zone Number 62	0155	Zone Number 125
0030	Zone Function 30	0093	Zone Number 63	0156	Zone Number 126
0031	Zone Number 1	0094	Zone Number 64	0157	Zone Number 127
0032	Zone Number 2	0095	Zone Number 65	0158	Zone Number 128
0033	Zone Number 3	0096	Zone Number 66	0159	Zone Number 129
0034	Zone Number 4	0097	Zone Number 67	0160	Zone Number 130
0035	Zone Number 5	0098	Zone Number 68	0161	Zone Number 131
0036	Zone Number 6	0099	Zone Number 69	0162	Zone Number 132
0037	Zone Number 7	0100	Zone Number 70	0163	Zone Number 133
0038	Zone Number 8	0101	Zone Number 71	0164	Zone Number 134
0039	Zone Number 9	0102	Zone Number 72	0165	Zone Number 135
0040	Zone Number 10	0103	Zone Number 73	0166	Zone Number 136
0041	Zone Number 11	0104	Zone Number 74	0167	Zone Number 137
0042	Zone Number 12	0105	Zone Number 75	0168	Zone Number 138
0043	Zone Number 13	0106	Zone Number 76	0169	Zone Number 139
0044	Zone Number 14	0107	Zone Number 77	0170	Zone Number 140
0045	Zone Number 15	0108	Zone Number 78	0171	Zone Number 141
0046	Zone Number 16	0109	Zone Number 79	0172	Zone Number 142
0047	Zone Number 17	0110	Zone Number 80	0173	Zone Number 143
0048	Zone Number 18	0111	Zone Number 81	0174	Zone Number 144
0049	Zone Number 19	0112	Zone Number 82	0175	Zone Number 145
0050	Zone Number 20	0113	Zone Number 83	0176	Zone Number 146
0051	Zone Number 21	0114	Zone Number 84	0177	Zone Number 147
0052	Zone Number 22	0115	Zone Number 85	0178	Zone Number 148
0053	Zone Number 23	0116	Zone Number 86	0179	Zone Number 149
0054	Zone Number 24	0117	Zone Number 87	0180	Zone Number 150
0055	Zone Number 25	0118	Zone Number 88	0181	Zone Number 151
0056	Zone Number 26	0119	Zone Number 89	0182	Zone Number 152
0057	Zone Number 27	0120	Zone Number 90	0183	Zone Number 153
0058	Zone Number 28	0121	Zone Number 91	0184	Zone Number 154
0059	Zone Number 29	0122	Zone Number 92	0185	Zone Number 155
0060	Zone Number 30	0123	Zone Number 93	0186	Zone Number 156
0061	Zone Number 31	0124	Zone Number 94	0187	Zone Number 157
0062	Zone Number 32	0125	Zone Number 95	0188	Zone Number 158

Address	Description
0189	Zone Number 159
0190	Zone Number 160
0191	Zone Number 161
0192	Zone Number 162
0193	Zone Number 163
0194	Zone Number 164
0195	Zone Number 165
0196	Zone Number 166
0197	Zone Number 167
0198	Zone Number 168
0199	Zone Number 169
0200	Zone Number 170
0201	Zone Number 171
0202	Zone Number 172
0203	Zone Number 173
0204	Zone Number 174
0205	Zone Number 175
0206	Zone Number 176
0207	Zone Number 177
0208	Zone Number 178
0209	Zone Number 179
0210	Zone Number 180
0211	Zone Number 181
0212	Zone Number 182
0213	Zone Number 183
0214	Zone Number 184
0215	Zone Number 185
0216	Zone Number 186
0217	Zone Number 187
0218	Zone Number 188
0219	Zone Number 189
0220	Zone Number 190
0221	Zone Number 191
0222	Zone Number 192
0223	Zone Number 193
0224	Zone Number 194
0225	Zone Number 195
0226	Zone Number 196
0227	Zone Number 197
0228	Zone Number 198
0229	Zone Number 199
0230	Zone Number 200
0231	Zone Number 201
0232	Zone Number 202
0233	Zone Number 203
0234	Zone Number 204
0235	Zone Number 205
0236	Zone Number 206
0237	Zone Number 207
0238	Zone Number 208
0239	Zone Number 209
0240	Zone Number 210
0241	Zone Number 211
0242	Zone Number 212
0243	Zone Number 213
0244	Zone Number 214
0245	Zone Number 215
0246	Zone Number 216
0247	Zone Number 217
0248	Zone Number 218
0249	Zone Number 219
0250	Zone Number 220
0251	Zone Number 221
0252	Zone Number 222
0253	Zone Number 223

Address	Description
0254	Zone Number 224
0255	Zone Number 225
0256	Zone Number 226
0257	Zone Number 227
0258	Zone Number 228
0259	Zone Number 229
0260	Zone Number 230
0261	Zone Number 231
0262	Zone Number 232
0263	Zone Number 233
0264	Zone Number 234
0265	Zone Number 235
0266	Zone Number 236
0267	Zone Number 237
0268	Zone Number 238
0269	Zone Number 239
0270	Zone Number 240
0271	Zone Number 241
0272	Zone Number 242
0273	Zone Number 243
0274	Zone Number 244
0275	Zone Number 245
0276	Zone Number 246
0277	Zone Number 247
0278	Zone Number 248
0287	Zone 1 & 2 Partitin Assign.
0288	Zone 3 & 4 Partition Assign.
0289	Zone 5 & 6 Partition Assign.
0290	Zone 7 & 8 Partition Assign.
0291	Zone 9 & 10 Partition Assign.
0292	Zone 11 & 12 Partition Assign.
0293	Zone 13 & 14 Partition Assign.
0294	Zone 15 & 16 Partition Assign.
0295	Zone 17 & 18 Partition Assign.
0296	Zone 19 & 20 Partition Assign.
0297	Zone 21 & 22 Partition Assign.
0298	Zone 23 & 24 Partition Assign.
0299	Zone 25 & 26 Partition Assign.
0300	Zone 27 & 28 Partition Assign.
0301	Zone 29 & 30 Partition Assign.
0302	Zone 31 & 32 Partition Assign.
0303	Zone 33 & 34 Partition Assign.
0304	Zone 35 & 36 Partition Assign.
0305	Zone 37 & 38 Partition Assign.
0306	Zone 39 & 40 Partition Assign.
0307	Zone 41 & 42 Partition Assign.
0308	Zone 43 & 44 Partition Assign.
0309	Zone 45 & 46 Partition Assign.
0310	Zone 47 & 48 Partition Assign.
0311	Zone 49 & 50 Partition Assign.
0312	Zone 51 & 52 Partition Assign.
0313	Zone 53 & 54 Partition Assign.
0314	Zone 55 & 56 Partition Assign.
0315	Zone 57 & 58 PartitionAssign.
0316	Zone 59 & 60 Partition Assign.
0317	Zone 61 & 62 Partition Assign.
0318	Zone 63 & 64 Partition Assign.
0319	Zone 65 & 66 Partition Assign.
0320	Zone 67 & 68 Partition Assign.
0321	Zone 69 & 70 Partition Assign.
0322	Zone 71 & 72 Partition Assign.
0323	Zone 73 & 74 Partition Assign.
0324	Zone 75 & 76 Partition Assign.
0325	Zone 77 & 78 Partition Assign.
0326	Zone 79 & 80 Partition Assign.

Address	Description
0327	Zone 81 & 82 Partition Assign.
0328	Zone 83 & 84 Partition Assign.
0329	Zone 85 & 86 Partition Assign.
0330	Zone 87 & 88 Partition Assign.
0331	Zone 89 & 90 Partition Assign.
0332	Zone 91 & 92 Partition Assign.
0333	Zone 93 & 94 Partition Assign.
0334	Zone 95 & 96 Partition Assign.
0335	Zone 97 & 98 Partition Assign.
0336	Zone 99 & 100 Partition Assign.
0337	Zone 101 & 102 Partition Assign.
0338	Zone 103 & 104 Partition Assign.
0339	Zone 105 & 106 Partition Assign.
0340	Zone 107 & 108 Partition Assign.
0341	Zone 109 & 110 Partition Assign.
0342	Zone 111 & 112 Partition Assign.
0343	Zone 113 & 114 Partition Assign.
0344	Zone 115 & 116 Partition Assign.
0345	Zone 117 & 118 Partition Assign.
0346	Zone 119 & 120 Partition Assign.
0347	Zone 121 & 122 Partition Assign.
0348	Zone 123 & 124 Partition Assign.
0349	Zone 125 & 126 Partition Assign.
0350	Zone 127 & 128 Partition Assign.
0351	Zone 129 & 130 Partition Assign.
0352	Zone 131 & 132 Partition Assign.
0353	Zone 133 & 134 Partition Assign.
0354	Zone 135 & 136 Partition Assign.
0355	Zone 137 & 138 Partition Assign.
0356	Zone 139 & 140 Partition Assign.
0357	Zone 141 & 142 Partition Assign.
0358	Zone 143 & 144 Partition Assign.
0359	Zone 145 & 146 Partition Assign.
0360	Zone 147 & 148 Partition Assign.
0361	Zone 149 & 150 Partition Assign.
0362	Zone 151 & 152 Partition Assign.
0363	Zone 153 & 154 Partition Assign.
0364	Zone 155 & 156 Partition Assign.
0365	Zone 157 & 158 Partition Assign.
0366	Zone 159 & 160 Partition Assign.
0367	Zone 161 & 162 Partition Assign.
0368	Zone 163 & 164 Partition Assign.
0369	Zone 165 & 166 Partition Assign.
0370	Zone 167 & 168 Partition Assign.
0371	Zone 169 & 170 Partition Assign.
0372	Zone 171 & 172 Partition Assign.
0373	Zone 173 & 174 Partition Assign.
0374	Zone 175 & 176 Partition Assign.
0375	Zone 177 & 178 Partition Assign.
0376	Zone 179 & 180 Partition Assign.
0377	Zone 181 & 182 Partition Assign.
0378	Zone 183 & 184 Partition Assign.
0379	Zone 185 & 186 Partition Assign.
0380	Zone 187 & 188 Partition Assign.
0381	Zone 189 & 190 Partition Assign.
0382	Zone 191 & 192 Partition Assign.
0383	Zone 193 & 194 Partition Assign.
0384	Zone 195 & 196 Partition Assign.
0385	Zone 197 & 198 Partition Assign.
0386	Zone 199 & 200 Partition Assign.
0387	Zone 201 & 202 Partition Assign.
0388	Zone 203 & 204 Partition Assign.
0389	Zone 205 & 206 Partition Assign.
0390	Zone 207 & 208 Partition Assign.
0391	Zone 209 & 210 Partition Assign.

Address	Description
0392	Zone 211 & 212 Partition Assign.
0393	Zone 213 & 214 Partition Assign.
0394	Zone 215 & 216 Partition Assign.
0395	Zone 217 & 218 Partition Assign.
0396	Zone 219 & 220 Partition Assign.
0397	Zone 221 & 222 Partition Assign.
0398	Zone 223 & 224 Partition Assign.
0399	Zone 225 & 226 Partition Assign.
0400	Zone 227 & 228 Partition Assign.
0401	Zone 229 & 230 Partition Assign.
0402	Zone 231 & 232 Partition Assign.
0403	Zone 233 & 234 Partition Assign.
0404	Zone 235 & 236 Partition Assign.
0405	Zone 237 & 238 Partition Assign.
0406	Zone 239 & 240 Partition Assign.
0407	Zone 241 & 242 Partition Assign.
0408	Zone 243 & 244 Partition Assign.
0409	Zone 245 & 246 Partition Assign.
0410	Zone 247 & 248 Partition Assign.
0415	Zone 1 & 2 Zone Type
0416	Zone 3 & 4 Zone Type
0417	Zone 5 & 6 Zone Type
0418	Zone 7 & 8 Zone Type
0419	Zone 9 & 10 Zone Type
0420	Zone 11 & 12 Zone Type
0421	Zone 13 & 14 Zone Type
0422	Zone 15 & 16 Zone Type
0423	Zone 17 & 18 Zone Type
0424	Zone 19 & 20 Zone Type
0425	Zone 21 & 22 Zone Type
0426	Zone 23 & 24 Zone Type
0427	Zone 25 & 26 Zone Type
0428	Zone 27 & 28 Zone Type
0429	Zone 29 & 30 Zone Type
0430	Zone 31 & 32 Zone Type
0431	Zone 33 & 34 Zone Type
0432	Zone 35 & 36 Zone Type
0433	Zone 37 & 38 Zone Type
0434	Zone 39 & 40 Zone Type
0435	Zone 41 & 42 Zone Type
0436	Zone 43 & 44 Zone Type
0437	Zone 45 & 46 Zone Type
0438	Zone 47 & 48 Zone Type
0439	Zone 49 & 50 Zone Type
0440	Zone 51 & 52 Zone Type
0441	Zone 53 & 54 Zone Type
0442	Zone 55 & 56 Zone Type
0443	Zone 57 & 58 Zone Type
0444	Zone 59 & 60 Zone Type
0445	Zone 61 & 62 Zone Type
0446	Zone 63 & 64 Zone Type
0447	Zone 65 & 66 Zone Type
0448	Zone 67 & 68 Zone Type
0449	Zone 69 & 70 Zone Type
0450	Zone 71 & 72 Zone Type
0451	Zone 73 & 74 Zone Type
0452	Zone 75 & 76 Zone Type
0453	Zone 77 & 78 Zone Type
0454	Zone 79 & 80 Zone Type
0455	Zone 81 & 82 Zone Type
0456	Zone 83 & 84 Zone Type
0457	Zone 85 & 86 Zone Type
0458	Zone 87 & 88 Zone Type
0459	Zone 89 & 90 Zone Type
0460	Zone 91 & 92 Zone Type

Address	Description
0461	Zone 93 & 94 Zone Type
0462	Zone 95 & 96 Zone Type
0463	Zone 97 & 98 Zone Type
0464	Zone 99 & 100 Zone Type
0465	Zone 101 & 102 Zone Type
0466	Zone 103 & 104 Zone Type
0467	Zone 105 & 106 Zone Type
0468	Zone 107 & 108 Zone Type
0469	Zone 109 & 110 Zone Type
0470	Zone 111 & 112 Zone Type
0471	Zone 113 & 114 Zone Type
0472	Zone 116 & 115 Zone Type
0473	Zone 117 & 118 Zone Type
0474	Zone 119 & 120 Zone Type
0475	Zone 121 & 122 Zone Type
0476	Zone 123 & 124 Zone Type
0477	Zone 125 & 126 Zone Type
0478	Zone 127 & 128 Zone Type
0479	Zone 129 & 130 Zone Type
0480	Zone 131 & 132 Zone Type
0481	Zone 133 & 134 Zone Type
0482	Zone 135 & 136 Zone Type
0483	Zone 137 & 138 Zone Type
0484	Zone 139 & 140 Zone Type
0485	Zone 141 & 142 Zone Type
0486	Zone 143 & 144 Zone Type
0487	Zone 145 & 146 Zone Type
0488	Zone 147 & 148 Zone Type
0489	Zone 149 & 150 Zone Type
0490	Zone 151 & 152 Zone Type
0491	Zone 153 & 154 Zone Type
0492	Zone 155 & 156 Zone Type
0493	Zone 157 & 158 Zone Type
0494	Zone 159 & 160 Zone Type
0495	Zone 161 & 162 Zone Type
0496	Zone 163 & 164 Zone Type
0497	Zone 165 & 166 Zone Type
0498	Zone 167 & 168 Zone Type
0499	Zone 169 & 170 Zone Type
0500	Zone 171 & 172 Zone Type
0501	Zone 173 & 174 Zone Type
0502	Zone 175 & 176 Zone Type
0503	Zone 177 & 178 Zone Type
0504	Zone 179 & 180 Zone Type
0505	Zone 181 & 182 Zone Type
0506	Zone 183 & 184 Zone Type
0507	Zone 185 & 186 Zone Type
0508	Zone 187 & 188 Zone Type
0509	Zone 189 & 190 Zone Type
0510	Zone 191 & 192 Zone Type
0511	Zone 193 & 194 Zone Type
0512	Zone 195 & 196 Zone Type
0513	Zone 197 & 198 Zone Type
0514	Zone 199 & 200 Zone Type
0515	Zone 201 & 202 Zone Type
0516	Zone 203 & 204 Zone Type
0517	Zone 205 & 206 Zone Type
0518	Zone 207 & 208 Zone Type
0519	Zone 209 & 210 Zone Type
0520	Zone 211 & 212 Zone Type
0521	Zone 213 & 214 Zone Type
0522	Zone 215 & 216 Zone Type
0523	Zone 217 & 218 Zone Type
0524	Zone 219 & 220 Zone Type
0525	Zone 221 & 222 Zone Type

Address	Description
0526	Zone 223 & 224 Zone Type
0527	Zone 225 & 226 Zone Type
0528	Zone 227 & 228 Zone Type
0529	Zone 229 & 230 Zone Type
0530	Zone 231 & 232 Zone Type
0531	Zone 233 & 234 Zone Type
0532	Zone 235 & 236 Zone Type
0533	Zone 237 & 238 Zone Type
0534	Zone 239 & 240 Zone Type
0535	Zone 241 & 242 Zone Type
0536	Zone 243 & 244 Zone Type
0537	Zone 245 & 246 Zone Type
0538	Zone 247 & 248 Zone Type
0545	Alpha for Partition 1
0561	Alpha for Partition 2
0577	Alpha for Partition 3
0593	Alpha for Partition 4
0609	Alpha for Partition 5
0625	Alpha for Partition 6
0641	Alpha for Partition 7
0657	Alpha for Partition 8
0673	Alpha for Zone Number 1
0689	Alpha for Zone Number 2
0705	Alpha for Zone Number 3
0721	Alpha for Zone Number 4
0737	Alpha for Zone Number 5
0753	Alpha for Zone Number 6
0769	Alpha for Zone Number 7
0785	Alpha for Zone Number 8
0801	Alpha for Zone Number 9
0817	Alpha for Zone Number 10
0833	Alpha for Zone Number 11
0849	Alpha for Zone Number 12
0865	Alpha for Zone Number 13
0881	Alpha for Zone Number 14
0897	Alpha for Zone Number 15
0913	Alpha for Zone Number 16
0929	Alpha for Zone Number 17
0945	Alpha for Zone Number 18
0961	Alpha for Zone Number 19
0977	Alpha for Zone Number 20
0993	Alpha for Zone Number 21
1009	Alpha for Zone Number 22
1025	Alpha for Zone Number 23
1041	Alpha for Zone Number 24
1057	Alpha for Zone Number 25
1073	Alpha for Zone Number 26
1089	Alpha for Zone Number 27
1105	Alpha for Zone Number 28
1121	Alpha for Zone Number 29
1137	Alpha for Zone Number 30
1153	Alpha for Zone Number 31
1169	Alpha for Zone Number 32
1185	Alpha for Zone Number 33
1201	Alpha for Zone Number 34
1217	Alpha for Zone Number 35
1233	Alpha for Zone Number 36
1249	Alpha for Zone Number 37
1265	Alpha for Zone Number 38
1281	Alpha for Zone Number 39
1297	Alpha for Zone Number 40
1313	Alpha for Zone Number 41
1329	Alpha for Zone Number 42
1345	Alpha for Zone Number 43
1361	Alpha for Zone Number 44

Address	Description
1377	Alpha for Zone Number 45
1393	Alpha for Zone Number 46
1409	Alpha for Zone Number 47
1425	Alpha for Zone Number 48
1441	Alpha for Zone Number 49
1457	Alpha for Zone Number 50
1473	Alpha for Zone Number 51
1489	Alpha for Zone Number 52
1505	Alpha for Zone Number 53
1521	Alpha for Zone Number 54
1537	Alpha for Zone Number 55
1553	Alpha for Zone Number 56
1569	Alpha for Zone Number 57
1585	Alpha for Zone Number 58
1601	Alpha for Zone Number 59
1617	Alpha for Zone Number 60
1633	Alpha for Zone Number 61
1649	Alpha for Zone Number 62
1665	Alpha for Zone Number 63
1681	Alpha for Zone Number 64
1697	Alpha for Zone Number 65
1713	Alpha for Zone Number 66
1729	Alpha for Zone Number 67
1745	Alpha for Zone Number 68
1761	Alpha for Zone Number 69
1777	Alpha for Zone Number 70
1793	Alpha for Zone Number 71
1809	Alpha for Zone Number 72
1825	Alpha for Zone Number 73
1841	Alpha for Zone Number 74
1857	Alpha for Zone Number 75
1873	Alpha for Zone Number 76
1889	Alpha for Zone Number 77
1905	Alpha for Zone Number 78
1921	Alpha for Zone Number 79
1937	Alpha for Zone Number 80
1953	Alpha for Zone Number 81
1969	Alpha for Zone Number 82
1985	Alpha for Zone Number 83
2001	Alpha for Zone Number 84
2017	Alpha for Zone Number 85
2033	Alpha for Zone Number 86
2049	Alpha for Zone Number 87
2065	Alpha for Zone Number 88
2081	Alpha for Zone Number 89
2097	Alpha for Zone Number 90
2113	Alpha for Zone Number 91
2129	Alpha for Zone Number 92
2145	Alpha for Zone Number 93
2161	Alpha for Zone Number 94
2177	Alpha for Zone Number 95
2193	Alpha for Zone Number 96
2209	Alpha for Zone Number 97
2225	Alpha for Zone Number 98
2241	Alpha for Zone Number 99
2257	Alpha for Zone Number 100
2273	Alpha for Zone Number 101
2289	Alpha for Zone Number 102
2305	Alpha for Zone Number 103
2321	Alpha for Zone Number 104
2337	Alpha for Zone Number 105
2353	Alpha for Zone Number 106
2369	Alpha for Zone Number 107
2385	Alpha for Zone Number 108
2401	Alpha for Zone Number 109

Address	Description
2417	Alpha for Zone Number 110
2433	Alpha for Zone Number 111
2449	Alpha for Zone Number 112
2465	Alpha for Zone Number 113
2481	Alpha for Zone Number 114
2497	Alpha for Zone Number 115
2513	Alpha for Zone Number 116
2529	Alpha for Zone Number 117
2545	Alpha for Zone Number 118
2561	Alpha for Zone Number 119
2577	Alpha for Zone Number 120
2593	Alpha for Zone Number 121
2609	Alpha for Zone Number 122
2625	Alpha for Zone Number 123
2641	Alpha for Zone Number 124
2657	Alpha for Zone Number 125
2673	Alpha for Zone Number 126
2689	Alpha for Zone Number 127
2705	Alpha for Zone Number 128
2721	Zone Function Bypass 1-8
2722	Zone Function Bypass 9-16
2723	Zone Function Bypass 17-24
2724	Zone Function Bypass 25-30
2725	Command 4 (Cust.) Arming 1-8
2726	Command 4 (Cust.) Arming 9-16
2727	Command 4 (Cust.) Arming 17-24
2728	Command 4 (Cust.) Arming 25-30
2729	RF Zone Group Program. 129-248
2731	Receiver Configuration
2732	Force Arming & Ground Fault
2733	Commerical Fire Mode
2734	Alarm Output
2735	Programmable Output Type 1
2736	Programmable Output Type 2
2737	Output Part. Assign. & Bell Output
2738	Output Part. Assign. & Keyfob Chirp
2740	Octal Module #1, Relay #1
2742	Octal Module #1, Relay #2
2744	Octal Module #1, Relay #3
2746	Octal Module #1, Relay #4
2748	Octal Module #1, Relay #5
2750	Octal Module #1, Relay #6
2752	Octal Module #1, Relay #7
2754	Octal Module #1, Relay #8
2756	Octal Module #2, Relay #1
2758	Octal Module #2, Relay #2
2760	Octal Module #2, Relay #3
2762	Octal Module #2, Relay #4
2764	Octal Module #2, Relay #5
2766	Octal Module #2, Relay #6
2768	Octal Module #2, Relay #7
2770	Octal Module #2, Relay #8
2772	Output Function 1
2775	Output Function 2
2778	Output Function 3
2781	Output Function 4
2784	Output Function 5
2787	Output Function 6
2790	Output Function 7
2793	Output Function 8
2796	Output Function 9
2799	Output Function 10
2802	Output Function 11
2805	Output Function 12
2808	Output Function 13

Address	Description
2811	Output Function 14
2814	Output Function 15
2817	Output Function 16
2820	Output Function 17
2823	Output Function 18
2826	Output Function 19
2829	Output Function 20
2832	Output Function 21
2835	Output Function 22
2838	Output Function 23
2841	Output Function 24
2844	Octal Relay Partition Assignment
2845	Octal Relay Partition Assignment
2846	Octal Relay Partition Assignment
2847	Octal Relay Partition Assignment
2848	Octal Relay Partition Assignment
2849	Octal Relay Partition Assignment
2850	Octal Relay Partition Assignment
2851	Octal Relay Partition Assignment
2852	Output Function Partition Assign.
2853	Output Function Partition Assign.
2854	Output Function Partition Assign.
2855	Output Function Partition Assign.
2856	Output Function Partition Assign.
2857	Output Function Partition Assign.
2858	Output Function Partition Assign.
2859	Output Function Partition Assign.
2860	Output Function Partition Assign.
2861	Output Function Partition Assign.
2862	Output Function Partition Assign.
2863	Output Function Partition Assign.
3131	Keypad Assignment
3132	Keypad Assignment
3133	Keypad Assignment
3134	Keypad Assignment
3135	Keypad Assignment
3136	Keypad Assignment
3137	Keypad Assignment
3138	Keypad Assignment & Backlight Control
3139	Keypad Partition Assignment
3140	Keypad Partition Assignment
3141	Keypad Partition Assignment
3142	Keypad Partition Assignment
3143	Keypad Partition Assignment
3144	Keypad Partition Assignment
3145	Keypad Partition Assignment
3146	Keypad Partition Assignment
3147	Function Key Programming
3148	Function Key Programming
3149	Open/Close Report Control
3151	Open/Close Rprt. & Zone Alarm Routing
3152	System Routing
3153	Phone/DS7416i Routing
3154	Phone/DS7416i Routing
3155	Phone Number General Control
3156	Phone Number 1 Control
3157	Phone Number 2 Control
3158	Answer Ring Count (Arm/Disarm)
3159	Phone Number 1
3175	Phone Number 2
3191	Phone Number 3
3207	Keypad Fire Alarm Report
3208	Keypad Fire Restoral Report

Address	Description
3209	Zone Function 1 Alarm Report
3210	Zone Function 2 Alarm Report
3211	Zone Function 3 Alarm Report
3212	Zone Function 4 Alarm Report
3213	Zone Function 5 Alarm Report
3214	Zone Function 6 Alarm Report
3215	Zone Function 7 Alarm Report
3216	Zone Function 8 Alarm Report
3217	Zone Function 9 Alarm Report
3218	Zone Function 10 Alarm Report
3219	Zone Function 11 Alarm Report
3220	Zone Function 12 Alarm Report
3221	Zone Function 13 Alarm Report
3222	Zone Function 14 Alarm Report
3223	Zone Function 15 Alarm Report
3224	Zone Function 16 Alarm Report
3225	Zone Function 17 Alarm Report
3226	Zone Function 18 Alarm Report
3227	Zone Function 19 Alarm Report
3228	Zone Function 20 Alarm Report
3229	Zone Function 21 Alarm Report
3230	Zone Function 22 Alarm Report
3231	Zone Function 23 Alarm Report
3232	Zone Function 24 Alarm Report
3233	Zone Function 25 Alarm Report
3234	Zone Function 26 Alarm Report
3235	Zone Function 27 Alarm Report
3236	Zone Function 28 Alarm Report
3237	Zone Function 29 Alarm Report
3238	Zone Function 30 Alarm Report
3239	Keypad Emergency Report
3240	Keypad Panic Report
3241	Zone Function 1 Restoral Report
3242	Zone Function 2 Restoral Report
3243	Zone Function 3 Restoral Report
3244	Zone Function 4 Restoral Report
3245	Zone Function 5 Restoral Report
3246	Zone Function 6 Restoral Report
3247	Zone Function 7 Restoral Report
3248	Zone Function 8 Restoral Report
3249	Zone Function 9 Restoral Report
3250	Zone Function 10 Restoral Report
3251	Zone Function 11 Restoral Report
3252	Zone Function 12 Restoral Report
3253	Zone Function 13 Restoral Report
3254	Zone Function 14 Restoral Report
3255	Zone Function 15 Restoral Report
3256	Zone Function 16 Restoral Report
3257	Zone Function 17 Restoral Report
3258	Zone Function 18 Restoral Report
3259	Zone Function 19 Restoral Report
3260	Zone Function 20 Restoral Report
3261	Zone Function 21 Restoral Report
3262	Zone Function 22 Restoral Report
3263	Zone Function 23 Restoral Report
3264	Zone Function 24 Restoral Report
3265	Zone Function 25 Restoral Report
3266	Zone Function 26 Restoral Report
3267	Zone Function 27 Restoral Report
3268	Zone Function 28 Restoral Report
3269	Zone Function 29 Restoral Report
3270	Zone Function 30 Restoral Report
3271	Zone Function 1 Trouble Report
3272	Zone Function 2 Trouble Report
3273	Zone Function 3 Trouble Report

Address	Description
3274	Zone Function 4 Trouble Report
3275	Zone Function 5 Trouble Report
3276	Zone Function 6 Trouble Report
3277	Zone Function 7 Trouble Report
3278	Zone Function 8 Trouble Report
3279	Zone Function 9 Trouble Report
3280	Zone Function 10 Trouble Report
3281	Zone Function 11 Trouble Report
3282	Zone Function 12 Trouble Report
3283	Zone Function 13 Trouble Report
3284	Zone Function 14 Trouble Report
3285	Zone Function 15 Trouble Report
3286	Zone Function 16 Trouble Report
3287	Zone Function 17 Trouble Report
3288	Zone Function 18 Trouble Report
3289	Zone Function 19 Trouble Report
3290	Zone Function 20 Trouble Report
3291	Zone Function 21 Trouble Report
3292	Zone Function 22 Trouble Report
3293	Zone Function 23 Trouble Report
3294	Zone Function 24 Trouble Report
3295	Zone Function 25 Trouble Report
3296	Zone Function 26 Trouble Report
3297	Zone Function 27 Trouble Report
3298	Zone Function 28 Trouble Report
3299	Zone Function 29 Trouble Report
3300	Zone Function 30 Trouble Report
3301	Zone Function 1 Trouble Restoral
3302	Zone Function 2 Trouble Restoral
3303	Zone Function 3 Trouble Restoral
3304	Zone Function 4 Trouble Restoral
3305	Zone Function 5 Trouble Restoral
3306	Zone Function 6 Trouble Restoral
3307	Zone Function 7 Trouble Restoral
3308	Zone Function 8 Trouble Restoral
3309	Zone Function 9 Trouble Restoral
3310	Zone Function 10 Trouble Restoral
3311	Zone Function 11 Trouble Restoral
3312	Zone Function 12 Trouble Restoral
3313	Zone Function 13 Trouble Restoral
3314	Zone Function 14 Trouble Restoral
3315	Zone Function 15 Trouble Restoral
3316	Zone Function 16 Trouble Restoral
3317	Zone Function 17 Trouble Restoral
3318	Zone Function 18 Trouble Restoral
3319	Zone Function 19 Trouble Restoral
3320	Zone Function 20 Trouble Restoral
3321	Zone Function 21 Trouble Restoral
3322	Zone Function 22 Trouble Restoral
3323	Zone Function 23 Trouble Restoral
3324	Zone Function 24 Trouble Restoral
3325	Zone Function 25 Trouble Restoral
3326	Zone Function 26 Trouble Restoral
3327	Zone Function 27 Trouble Restoral
3328	Zone Function 28 Trouble Restoral
3329	Zone Function 29 Trouble Restoral
3330	Zone Function 30 Trouble Restoral
3331	Open Report
3332	Close Report
3333	Duress Report
3334	Partial Close Report
3335	First Open After Alarm Report.
3336	Low Battery Report
3337	Low Battery Restoral Report
3338	AC Fail Report

Address	Description
3339	AC Restoral Report
3340	Communicator Test/System Normal Report
3341	Remote Prog. Successful Report
3342	Remote Prog. Unsuccessful Report
3343	Local Prog. Successful Rprt.
3344	Local Prog. Unsuccessful Report
3345	System Trouble Report
3346	Sysem Trouble Restoral Report
3347	Communicator Test/System Off Normal Report
3348	Exit Error Report
3349	Recent Closing Report
3350	System Walk Test Report
3351	System Walk Test Restoral
3352	Fire Walk Test Report
3353	Fire Walk Test Restoral
3354	Mux Low Temperature Report
3355	Mux Low Temperature Restoral
3356	Dirty Smoke Chamber Report
3357	Dirty Smoke Chamber Restoral
3358	Zone Function 1 Bypass
3359	Zone Function 2 Bypass
3360	Zone Function 3 Bypass
3361	Zone Function 4 Bypass
3362	Zone Function 5 Bypass
3363	Zone Function 6 Bypass
3364	Zone Function 7 Bypass
3365	Zone Function 8 Bypass
3366	Zone Function 9 Bypass
3367	Zone Function 10 Bypass
3368	Zone Function 11 Bypass
3369	Zone Function 12 Bypass
3370	Zone Function 13 Bypass
3371	Zone Function 14 Bypass
3372	Zone Function 15 Bypass
3373	Zone Function 16 Bypass
3374	Zone Function 17 Bypass
3375	Zone Function 18 Bypass
3376	Zone Function 19 Bypass
3377	Zone Function 20 Bypass
3378	Zone Function 21 Bypass
3379	Zone Function 22 Bypass
3380	Zone Function 23 Bypass
3381	Zone Function 24 Bypass
3382	Zone Function 25 Bypass
3383	Zone Function 26 Bypass
3384	Zone Function 27 Bypass
3385	Zone Function 28 Bypass
3386	Zone Function 29 Bypass
3387	Zone Function 30 Bypass
3388	Zone Func. 1 Bypass Restoral
3389	Zone Func. 2 Bypass Restoral
3390	Zone Func. 3 Bypass Restoral
3391	Zone Func. 4 Bypass Restoral
3392	Zone Func. 5 Bypass Restoral
3393	Zone Func. 6 Bypass Restoral
3394	Zone Func. 7 Bypass Restoral
3395	Zone Func. 8 Bypass Restoral
3396	Zone Func. 9 Bypass Restoral
3397	Zone Func. 10 Bypass Restoral
3398	Zone Func. 11 Bypass Restoral
3399	Zone Func. 12 Bypass Restoral
3400	Zone Func. 13 Bypass Restoral
3401	Zone Func. 14 Bypass Restoral

Address	Description
3402	Zone Func. 15 Bypass Restoral
3403	Zone Func. 16 Bypass Restoral
3404	Zone Func. 17 Bypass Restoral
3405	Zone Func. 18 Bypass Restoral
3406	Zone Func. 19 Bypass Restoral
3407	Zone Func. 20 Bypass Restoral
3408	Zone Func. 21 Bypass Restoral
3409	Zone Func. 22 Bypass Restoral
3410	Zone Func. 23 Bypass Restoral
3411	Zone Func. 24 Bypass Restoral
3412	Zone Func. 25 Bypass Restoral
3413	Zone Func. 26 Bypass Restoral
3414	Zone Func. 27 Bypass Restoral
3415	Zone Func. 28 Bypass Restoral
3416	Zone Func. 29 Bypass Restoral
3417	Zone Func. 30 Bypass Restoral
3418	Keypad Tamper
3419	Keypad Tamper Restoral
3420	Partition Control
3421	Part. 1 & 2 General Code Control
3422	Part. 3 & 4 General Code Control
3423	Part. 5 & 6 General Code Control
3424	Part. 7 & 8 General Code Control
3425	Part. 1 & 2 Arming Warning Cntrl.
3426	Part. 3 & 4 Arming Warning Cntrl.
3427	Part. 5 & 6 Arming Warning Cntrl.
3428	Part. 7 & 8 Arming Warning Cntrl.
3429	Partition 1 Account Code 1
3431	Partition 1 Account Code 2
3433	Partition 2 Account Code 1
3435	Partition 2 Account Code 2
3437	Partition 3 Account Code 1
3439	Partition 3 Account Code 2
3441	Partition 4 Account Code 1
3443	Partition 4 Account Code 2
3445	Partition 5 Account Code 1
3447	Partition 5 Account Code 2
3449	Partition 6 Account Code 1
3451	Partition 6 Account Code 2
3453	Partition 7 Account Code 1
3455	Partition 7 Account Code 2
3457	Partition 8 Account Code 1
3459	Partition 8 Account Code 2
3477	Quick Arm Allowed
3478	PIN Length
4019	DS7412 Interface Control
4020	DS7412 Interface Configuration
4021	Dual Phone Line / Bell Supervision Module Output
4022	Comm. Test Report Timer
4024	Remote Programmer Timer
4026	Test Report & Remote Programmer Call-Out
4027	CR/LF Control
4028	Entry Delay Time 1
4029	Entry Delay Time 2
4030	Exit Delay Time
4032	Fire Bell Cutoff
4033	Burglary Bell Cutoff
4034	AC Fail Report Delay
4038	Pager Delay Timer
4039	RF Receiver Jam Detection Level
5001	Alpha for Zone Number 129
5017	Alpha for Zone Number 130
5033	Alpha for Zone Number 131

Address	Description
5049	Alpha for Zone Number 132
5065	Alpha for Zone Number 133
5081	Alpha for Zone Number 134
5097	Alpha for Zone Number 135
5113	Alpha for Zone Number 136
5129	Alpha for Zone Number 137
5145	Alpha for Zone Number 138
5161	Alpha for Zone Number 139
5177	Alpha for Zone Number 140
5193	Alpha for Zone Number 141
5209	Alpha for Zone Number 142
5225	Alpha for Zone Number 143
5241	Alpha for Zone Number 144
5257	Alpha for Zone Number 145
5273	Alpha for Zone Number 146
5289	Alpha for Zone Number 147
5305	Alpha for Zone Number 148
5321	Alpha for Zone Number 149
5337	Alpha for Zone Number 150
5353	Alpha for Zone Number 151
5369	Alpha for Zone Number 152
5385	Alpha for Zone Number 153
5401	Alpha for Zone Number 154
5417	Alpha for Zone Number 155
5433	Alpha for Zone Number 156
5449	Alpha for Zone Number 157
5465	Alpha for Zone Number 158
5481	Alpha for Zone Number 159
5497	Alpha for Zone Number 160
5513	Alpha for Zone Number 161
5529	Alpha for Zone Number 162
5545	Alpha for Zone Number 163
5561	Alpha for Zone Number 164
5577	Alpha for Zone Number 165
5593	Alpha for Zone Number 166
5609	Alpha for Zone Number 167
5625	Alpha for Zone Number 168
5641	Alpha for Zone Number 169
5657	Alpha for Zone Number 170
5673	Alpha for Zone Number 171
5689	Alpha for Zone Number 172
5705	Alpha for Zone Number 173
5721	Alpha for Zone Number 174
5737	Alpha for Zone Number 175
5753	Alpha for Zone Number 176
5769	Alpha for Zone Number 177
5785	Alpha for Zone Number 178
5801	Alpha for Zone Number 179
5817	Alpha for Zone Number 180
5833	Alpha for Zone Number 181
5849	Alpha for Zone Number 182
5865	Alpha for Zone Number 183
5881	Alpha for Zone Number 184
5897	Alpha for Zone Number 185
5913	Alpha for Zone Number 186
5929	Alpha for Zone Number 187
5945	Alpha for Zone Number 188
5961	Alpha for Zone Number 189
5977	Alpha for Zone Number 190
5993	Alpha for Zone Number 191
6009	Alpha for Zone Number 192
6025	Alpha for Zone Number 193
6041	Alpha for Zone Number 194
6057	Alpha for Zone Number 195
6073	Alpha for Zone Number 196

Address	Description
6089	Alpha for Zone Number 197
6105	Alpha for Zone Number 198
6121	Alpha for Zone Number 199
6137	Alpha for Zone Number 200
6153	Alpha for Zone Number 201
6169	Alpha for Zone Number 202
6185	Alpha for Zone Number 203
6201	Alpha for Zone Number 204
6217	Alpha for Zone Number 205
6233	Alpha for Zone Number 206
6249	Alpha for Zone Number 207
6265	Alpha for Zone Number 208
6281	Alpha for Zone Number 209
6297	Alpha for Zone Number 210
6313	Alpha for Zone Number 211
6329	Alpha for Zone Number 212
5345	Alpha for Zone Number 213
6361	Alpha for Zone Number 214
6377	Alpha for Zone Number 215
6393	Alpha for Zone Number 216
6409	Alpha for Zone Number 217
6425	Alpha for Zone Number 218
6441	Alpha for Zone Number 219
6457	Alpha for Zone Number 220
6473	Alpha for Zone Number 221
6489	Alpha for Zone Number 222
6505	Alpha for Zone Number 223
6521	Alpha for Zone Number 224
6537	Alpha for Zone Number 225
6553	Alpha for Zone Number 226
6569	Alpha for Zone Number 227
6585	Alpha for Zone Number 228
6601	Alpha for Zone Number 229
6617	Alpha for Zone Number 230
6633	Alpha for Zone Number 231
6649	Alpha for Zone Number 232
6665	Alpha for Zone Number 233
6681	Alpha for Zone Number 234
6697	Alpha for Zone Number 235
6713	Alpha for Zone Number 236
6729	Alpha for Zone Number 237
6745	Alpha for Zone Number 238
6761	Alpha for Zone Number 239
6777	Alpha for Zone Number 240
6793	Alpha for Zone Number 241
6809	Alpha for Zone Number 242
6825	Alpha for Zone Number 243
6841	Alpha for Zone Number 244
6857	Alpha for Zone Number 245
6873	Alpha for Zone Number 246
6889	Alpha for Zone Number 247
6905	Alpha for Zone Number 248

Index

Index - continued

Bosch Security Systems, Inc.
130 Perinton Parkway
Fairport, NY, USA 14450-9199
(800) 289-0096